Effect of sea-salt aerosol on tropospheric bromine chemistry

Lei Zhu[1,2] (leizhu@fas.harvard.edu), Daniel J. Jacob[1], Sebastian D. Eastham[3], Melissa P. Sulprizio[1], Xuan Wang[1], Tomás Sherwen[4], Mat J. Evans[4], Qianjie Chen[5,a], Becky Alexander[5], Theodore K. Koenig[6,7], Rainer Volkamer[6,7], L. Gregory Huey[8], Michael Le Breton[9,10], Thomas J Bannan[9], and Carl J. Percival[9,b]

[1]Harvard University; [2]Harvard-Smithsonian Center for Astrophysics; [3]MIT; [4]University of York; [5]University of Washington; [6]University of Colorado; [7]Cooperative Institute for Research in Environmental Sciences; [8]Georgia Tech; [9]University of Manchester; [10]University of Gothenburg; [a]now at University of Michigan; [b]now at JPL

*AGU Fall meeting 2018; Abstract # **V43E-0159***

Modeling of the sea salt aerosol (SSA) bromide depletion: A standing conundrum

- Bromine radicals ($BrO_x \equiv Br + BrO$) influence global tropospheric chemistry by depleting ozone and OH, and by oxidizing elemental mercury, sulfur species, and volatile organic compounds.
- Observations typically indicate a 50% depletion of sea salt aerosol (SSA) bromide relative to seawater composition, implying that SSA debromination could be the dominant global source of tropospheric bromine.
- However, BrO observations in the marine boundary layer (MBL) do not show large enhancements relative to the free troposphere. Ozone in the MBL similarly do not show depletion that would be expected from high level of BrO.
- This has led recent global models to exclude SSA debromination as a source of reactive inorganic bromine (Br_y).

A new mechanistic description of sea salt aerosol debromination

$HOBr\,(aq) + Br^- + H^+ \rightarrow Br_2\,(g) + H_2O$	(R1)	$Br_2 + h\nu \rightarrow 2\,Br$	(R2)
$Br + O_3 \rightarrow BrO + O_2$	(R3)	$HOBr\,(aq) + HSO_3^- \rightarrow H_2O + BrSO_3^-$	(R4a)
$HOBr\,(aq) + SO_3^{2-} \rightarrow OH^- + BrSO_3^-$	(R4b)	$BrSO_3^- + H_2O \rightarrow SO_4^{2-} + Br^- + 2H^+$	(R4c)
$Br + CH_3CHO \rightarrow HBr + CH_2CHO$	(R5)	$Br^- + O_3\,(aq) + H^+ \rightarrow HOBr + O_2$	(R6)
$Br^- + ClNO_3\,(aq) + H^+ \rightarrow BrCl + HNO_3$	(R7)	$0.15Br^- + 0.85Cl^- + HOI\,(aq) + H^+ \rightarrow 0.15IBr + 0.85ICl + H_2O$	(R8)

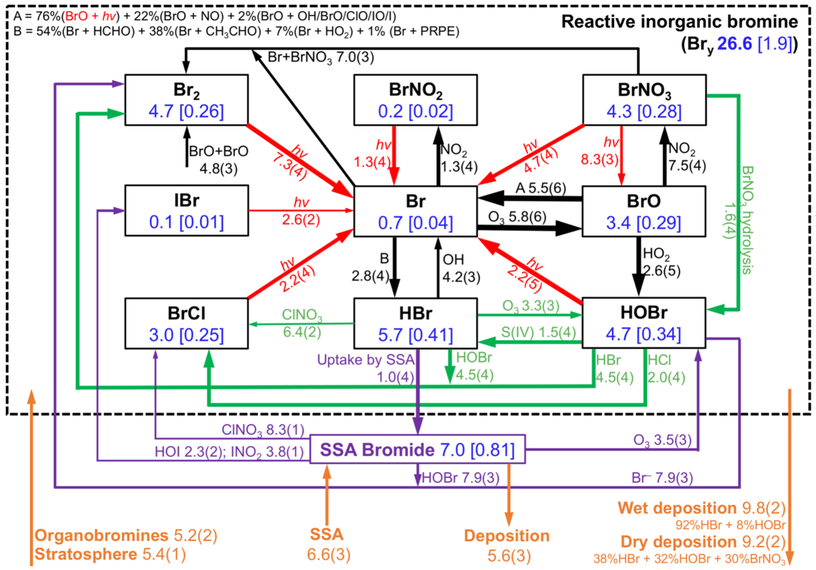

Global annual mean tropospheric budget and cycling of reactive inorganic bromine (Br_y) and sea salt aerosol (SSA) bromide.

Results are from GEOS-Chem simulation for 2012. Rates are in Gg Br a^{-1}, masses in the boxes are in Gg Br, and numbers in brackets are mean mixing ratios (ppt). Read 2.8(4) as 2.8×10^4 Gg Br a^{-1}.

Gaseous reactions
Photolysis
Heterogeneous reactions in SSA
Other heterogeneous reactions in cloud and sulfate aerosol
Sources and sinks

Modeling of sea salt aerosol debromination

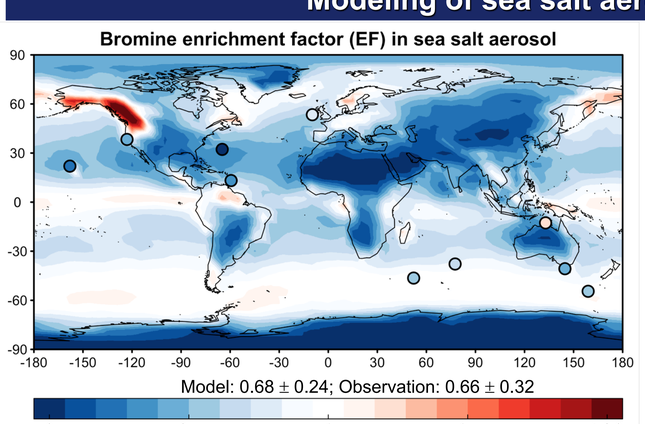

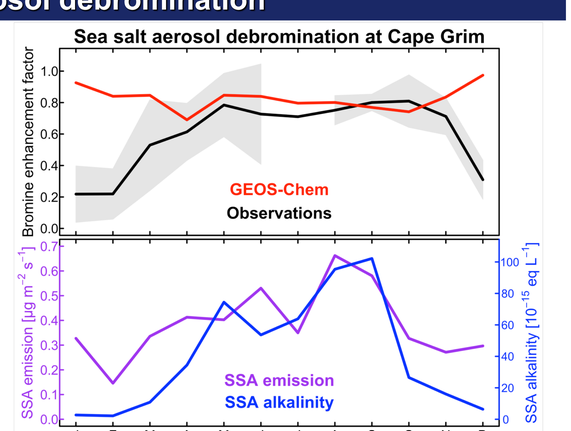

- The enrichment factor (*EF*) as a measure of SSA debromination.
- Bromine enrichment (*EF* > 1)
  - Southern Ocean: high alkalinity and uptake of HBr on SSA
  - Northwest coast of North America: large influx of Br_y from SSA combined with the short lifetime of coarse SSA
- The model overestimates the observed *EF* over the Southern Ocean, which appears to reflect a seasonal bias.

$$EF = \frac{([Br^-]/[SSA])_{SSA\ aerosol}}{([Br^-]/[SSA])_{SSA\ emission}}$$

Impact of sea salt aerosol debromination on BrO

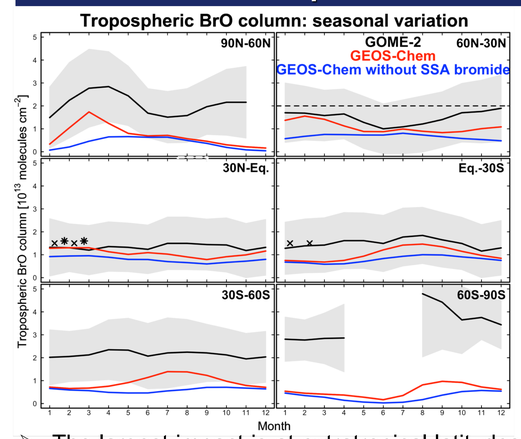

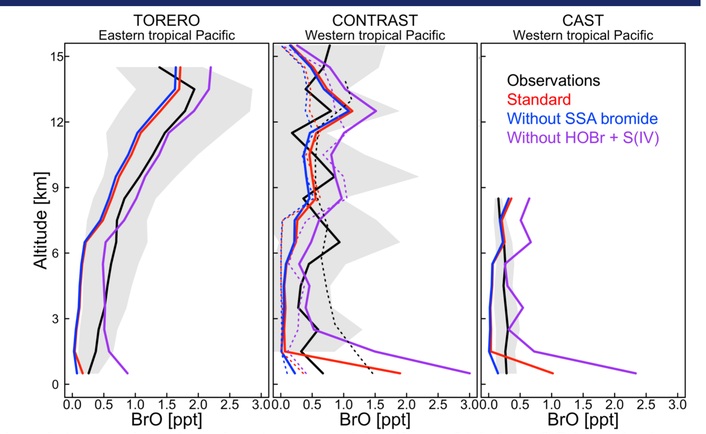

- The largest impact is at extratropical latitudes in winter and spring due to a combination of higher SSA emissions and more effective bromide recycling.
- The model low bias in the BrO column is mainly driven by the free troposphere, where SSA debromination plays little role and the Br_y source is mainly from organobromines.

BrO in the surface air: model results compared with observations

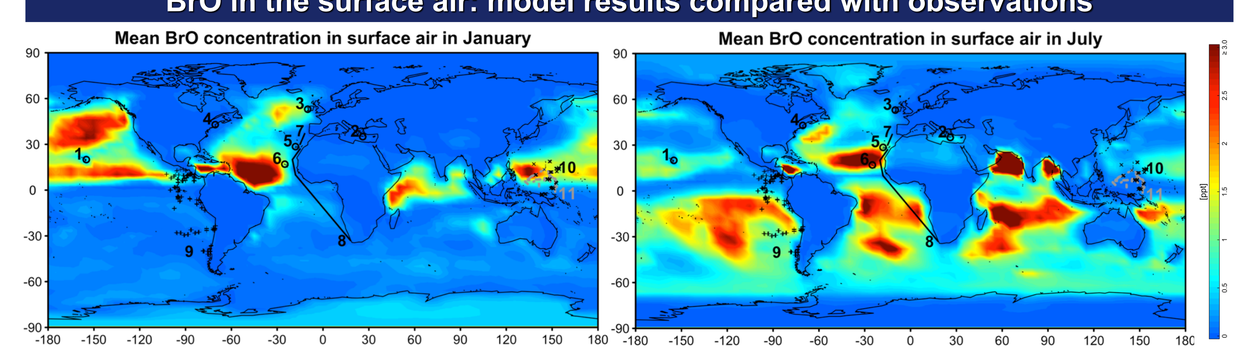

Daytime BrO (ppt) in the marine boundary layer

No.	Observed	Simulated	No.	Observed	Simulated
Ground-based observations			Ship-based observations		
1	< 2.0	0.63	7	~ 1.0	0.91
2	< 0.7–1.5	0.73	8	< 1.0–3.6	1.9
3	< 0.3–2.5	1.3	Aircraft-based observations		
4	< 2.0	0.89	9	0.26 ± 0.15	0.16
5	3.0	1.9	10	0.63 ± 0.74	1.8
6	2.5 ± 1.9	2.8	11	0.28 ± 0.16	1.0

- The model is generally consistent with observations in showing daytime BrO mixing rations in the range 0.5–2 ppt.
- The elevated marine surface BrO in winter time is because of a combination of greater SSA emission and weaker radiation (lower Br/BrO ratio).

Conclusions

- We show, through GEOS-Chem model simulations, that global observations of SSA debromination generating bromine radicals can be reconciled with the relatively low observed BrO concentrations in the MBL.
- Bromine radical cycling is limited by fast conversion to HBr through reactions of Br atoms with aldehydes and the heterogeneous HOBr + S(IV) reactions.
- The source of bromine radicals is mostly from SSA in the MBL, but from organobromines in the free troposphere.
- Inclusion of SSA debromination has a significant effect on tropospheric chemistry, lowering global tropospheric annual mean ozone by 4.0% and OH by 2.3%.
- One outstanding issue is the model underestimate of free tropospheric BrO, driven by the HOBr + S(IV) reactions.

Acknowledgments. This work was supported by the NSF Atmospheric Chemistry Program. We acknowledge contributions from the TORERO, CONTRAST, and CAST science team. We thank Dexian Chen for the CONTRAST BrO observations. Q.C. and B.A. acknowledge support from NSF AGS 1343077.

This work is published on ACPD (acp-2018-1239), we welcome discussions.