Renewable and Sustainable Energy Reviews 37 (2014) 517–537

Contents lists available at ScienceDirect

Renewable and Sustainable Energy Reviews

journal homepage: www.elsevier.com/locate/rser

Review of building energy modeling for control and operation

Xiwang Li *, Jin Wen

Department of Civil, Architectural and Environmental Engineering, Drexel University, 3141 Chestnut Street, Curtis 251, Philadelphia, PA 19104, USA

ARTICLE INFO

Article history:
Received 6 March 2014
Received in revised form
30 April 2014
Accepted 17 May 2014

Keywords:
Building energy modeling
Building optimal control
Demand response
Energy generation system
Energy storage system

ABSTRACT

Buildings consume about 41.1% of primary energy and 74% of the electricity in the U.S. Better or even optimal building energy control and operation strategies provide great opportunities to reduce building energy consumption. Moreover, it is estimated by the National Energy Technology Laboratory that more than one-fourth of the 713 GW of U.S. electricity demand in 2010 could be dispatchable if only buildings could respond to that dispatch through advanced building energy control and operation strategies and smart grid infrastructure. Energy forecasting models for building energy systems are essential to building energy control and operation. Three general categories of building energy forecasting models have been reported in the literature which include white-box (physics-based), black-box (data-driven), and gray-box (combination of physics based and data-driven) modeling approaches. This paper summarizes the existing efforts in this area as well as other critical areas related to building energy modeling, such as short-term weather forecasting. An up-to-date overview of research on application of building energy modeling methods in optimal control for single building and multiple buildings is also summarized in this paper. Different model-based and model-free optimization methods for building energy system operation are reviewed and compared in this paper. Agent based modeling, as a new modeling strategy, has made a remarkable progress in distributed energy systems control and optimization in the past years. The research literature on application of agent based model in building energy system control and operation is also identified and discussed in this paper.

Contents

* Corresponding author. Tel.: +1 215 895 6941; fax: +1 215 895 1364.
E-mail addresses: xl63@drexel.edu, xiwangli2010@gmail.com (X. Li).

http://dx.doi.org/10.1016/j.rser.2014.05.056
1364-0321/

1. Introduction

The electricity consumption of the U.S. grew 1.7% annually from 1996 to 2006, and the total growth will reach 26% until 2030 [1]. Among that consumption, buildings are responsible for over 70% of electricity consumption in the U.S. [2]. Around 30% of the energy used in building is consumed by heating, ventilating and air conditioning (HVAC) [3]. Studies have shown that most of the commercial and residential buildings have equipment and operational problem that reduce the comfort and waste more energy. For example, 4% to 20% of energy used in HVAC and lighting system was wasted due to equipment and operation problem [3]. Another study pointed out that faults or non-optimal control schemes could cause the malfunction of equipment or performance degradation from 15% to 30% in commercial buildings [4]. There is a great need to develop better building control and operation strategies to improve building energy efficiency and occupant comfort. Moreover, it is estimated by the National Energy Technology Laboratory that more than one-fourth of the 713 GW of U.S. electricity demand in 2010 could be dispatchable if only buildings could respond to that dispatch through advanced building energy control and operation strategies and smart grid infrastructure [5]. The building operation is therefore significant in terms of decreasing the peak demand and demand response.

A core component of building energy control and operation strategy determining is building energy forecasting models for building energy systems, such as HVAC systems, on-site energy generation and energy storage systems. However, developing high-fidelity energy forecasting models for building systems is not an easy task. Most of the building energy systems are complex nonlinear systems, which are strongly influenced by weather conditions, building operating modes, and occupant schedules. What is even more challenging, due to the cost constraint, building energy systems are typically not well measured or monitored. Sensors are only installed when they are necessary for certain control actions and they are usually with lower accuracy than typical industrial applications. Sub-meters, i.e. energy measurements for building sub-systems, are not commonly available in a building. Those enhance the difficulty of the application of building energy model for building operation in real fields. In recent years, there are a large number of studies focusing on improving the accuracy as well as simplifying the building energy models to make them suitable for on-line control and optimization.

In this paper, past studies focusing on building energy modeling and forecasting are reviewed and summarized. Studies include that focus on whole building energy forecasting (Section 2), energy modeling for major components such as power generation, energy storage (Section 3), and short-term weather forecasting and building on-line optimization (Section 4).

2. Whole building energy modeling and prediction

Transient building energy modeling and prediction are the basis for the operation of the building, especially for demand response. The literature on building energy modeling and forecasting focuses on three categories: long-term load forecasts for system planning, medium-term forecasts for system maintenance, and short-term modeling for daily operation, scheduling and load-shifting plans. Existing building energy models for short-term modeling can be categorized as purely physics based (white box) models, purely empirical (black box) models, and those in between (gray box models).

2.1. White box model

White box or forward modeling approach uses detailed physics based equations to model building components, sub-systems and systems to predict whole buildings and their sub-systems behaviors, such as their energy consumption and indoor comfort. Due to the detailed dynamic equations in white box models, they have the potential to capture the building dynamics well, but they are time consuming to develop and solve.

The general data flow and main procedure of white-box model development and simulation are summarized in Fig. 1 [6]. The parameters for weather condition, building structure, building systems and building equipment need to be obtained from their physical characteristics, usually from design plan, manufacture catalog or on-site measurement. The simulation engine is a group of mathematical equations which simulate the building operation and calculate the building energy consumption. A lot of mature white box software tools, such as EnergyPlus [7], ESP-r [8], and TRNSYS [9] have been widely used to analyze energy consumption and determine building control and operation schemes [10]. In order to provide a consistent baseline of building energy models, Department of Energy (DOE)'s building Technologies Program has developed a series of commercial building benchmark models [11].

EnergyPlus is a “text-based” simulation tool, which creates and stores the information of all the boundary conditions and building systems in a “text-based” idf file. As a result, some “script-editing-based” optimization models have been developed to improve the building control and operation. A Matlab-EnergyPlus MPC environment testbed has been created by May-Ostendorp et al. [12]. The procedure of this MPC is illustrated in Fig. 2. Before the

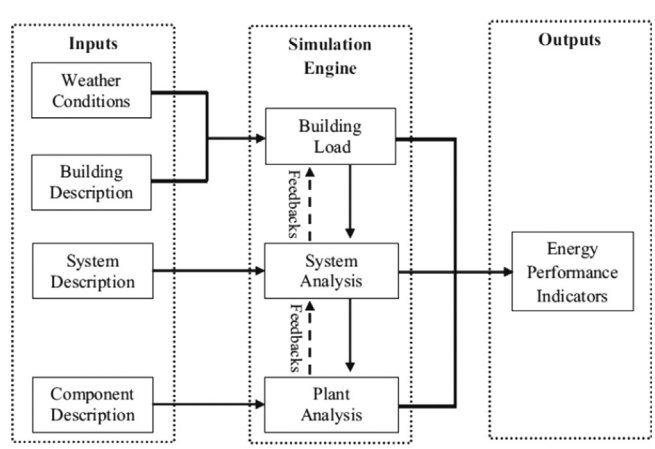

Fig. 1. General data flow and main procedure of detailed simulation.

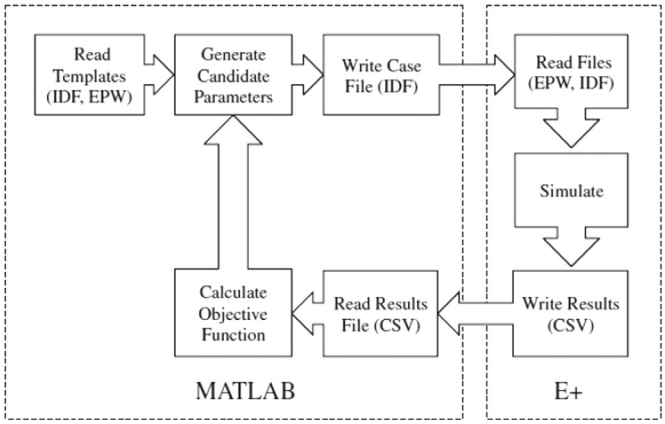

Fig. 2. Matlab-EnergyPlus MPC procedure.

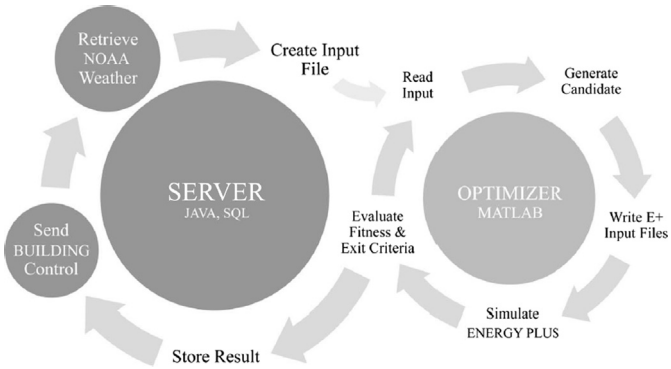

Fig. 3. Building operation online optimization process.

simulation engine read in all these files, candidate system parameters which need to be optimized would be written into the idf file, replacing the original data. EnergyPlus output results would then be evaluated within the MATLAB optimization module. Based upon the objective cost function, the operation parameters would be updated and written in to idf file again. This procedure will be repeated until the operational criteria are satisfied. Using this environment, the authors created a generalized linear model to extract near-optimal heuristics which can be implemented in to the building control systems. The logic "extraction" is developing a generalized linear model in the form of multi-logistic regression to build simplified decision models that can mimic the optimizer results.

Corbin et al. [13] further utilized this Matlab-EnergyPlus MPC environment and incorporated it with a particle swarm optimizer to predict optimal building control strategies. A meta-heuristic search technique, particle swarm optimization (PSO), has been adopted to search for near-optimal candidate parameters. In this paper, another on-line building operation optimization scheme has also been developed and demonstrated through a server-client framework. This framework allows optimized control strategies to be exchanged between the optimization model and the building automation system (BAS). The data exchanging process is illustrated in Fig. 3. In addition to the Matlab-EnergyPlus optimization environment in Fig. 2, a SQL server database was used to store the weather data, energy price data and EnergyPlus simulation results. The optimized control strategy was sent to the client computer installed in the building where it communicates through an interface with the BAS. This on-line optimization environment was also applied in a DOE benchmark building EnergyPlus models. The results showed 5% cost saving just by optimizing the hourly cooling setpoints in a large office building model, and 54% energy saving by optimizing hourly supply water temperature in a small office building model.

A Building Controls Virtual Test Bed (BCVTB) was developed by Wetter and Haves to link the different building models and control models [14]. Through this test bed, simulation models in different software, such as EnergyPlus, TRNSYS, Modelica, etc. can be integrated together to exchange data during the simulation. Ma et al. proposed and demonstrated an economic model predictive control (MPC) technique to reduce energy and demand cost [15]. By using BCVTB as middleware, real-time data exchange between EnergyPlus and a Matlab controller was realized. The economic objective function to minimize daily electricity costs was developed in MPC and applied in a EnergyPlus model through the middleware. About 25.3% energy saving and 28.5% cost saving were achieved by this MPC in a single story commercial building located in Chicago, Illinois. Another important control optimization software environment, Genopt, was also developed by Wetter [16], which can iteratively execute any simulation program based on plain text input/output files until an optimal solution is found. Genopt was used by Coffey et al. [17] to incorporate a modified genetic algorithm MPC with an EnergyPlus model to study the temperature control optimization in office buildings and its effect on building energy demand.

On the other hand, most buildings will not perform the same as they are designed and deteriorate over time. In order to detect and address these deterioration problems, a simulation framework for real-time building performance assessment and control is introduced by Pang et al. [18]. This framework can compare the prediction from the building energy model with measured operation data from the real field and the difference of these two can infer the presence and location of deteriorations and faults. BCVTB is utilized as the platform to acquire relevant inputs from the Energy Management and Control System (EMCS) through a BACnet interface and send them to the EnergyPlus and to a database for archiving.

Even though these elaborate simulation tools are effective and accurate, they require detailed information and parameters of buildings, energy systems and outside weather conditions. These parameters, however, are always difficult to obtain, and even sometimes are not available. What's even more challenging, creating these white box models normally requires expert work, and the calculation is extremely time-consuming, which is the major barrier for white box building models to be used in on-line model based control and operation. Cole et al. [19] tried to reduce EnergyPlus model using OpenStudio. The process of this model reduction can be summarized as follows:

1. Convert EnergyPlus model to OpenStudio model;
2. OpenStudio perturbs model parameters and Run the perturbed model in EnergyPlus;
3. Post-process the simulation results and fit a reduced-order linear model.

The discrepancy between this reduce-order linear model and EnergyPlus model is less than 2.3% under an optimal temperature setpoints setting situation. And then a MPC model was developed based on this reduced-order model which achieved 1–5% energy cost saving in a real-time electricity pricing environment.

2.2. Black box model

Black box model is also known as purely data driven model. Statistical models are directly applied to capture the correlation between building energy consumption and operation data. This type of models needs on-site measurements over a certain period

of time to train the models to be able to predict the building operation under different conditions. These black box models are also widely applied in existing studies to determine building control strategies to reduce energy consumption and energy cost.

Ma et al. combined multiple linear regression and self-regression methods to predict the building monthly energy consumption [15]. This regression model was then implemented in a MPC model to calculate the optimal temperature setpoints settings to save energy consumption and cost. Autoregressive with exogenous (ARX) model was developed and implemented to predict the 1 h ahead building load by Yun et al. [20]. This predictive model is applied on several different DOE benchmark buildings [11] to choose the building control strategies. The fourth-order ARX model for building thermal load forecasting can be described as Eq. (1):

$$Load_t = w_1 T_t + w_2 H_t + w_3 Wind_t + w_4 Rad_t + w_5 Occ_t + w_6 Load_{t-1} + w_7 Load_{t-2} + w_8 Load_{t-3} + w_9 Load_{t-4} + w_{10} \quad (1)$$

where *Load* is the building thermal load; *T* is the dry-bulb ambient temperature, *H* is the outdoor relative humidity, *Wind* is the wind speed, *Rad* is the direct irradiation, *Occ* is the occupancy, *w* is the weight for each input variable. ARX model structure has also be applied in Ref. [15]. Different from Yun's study, the ARX model in [15] is second order and the output of the model can be either room temperature (Eq. (2)) or energy consumption (Eq. (3)).

$$A_p(q)P(k) = B_p(q)u(k) + e(k) \quad (2)$$

$$A_T(q)T(k) = B_T(q)u(k) + e(k) \quad (3)$$

In these two equations, *A* and *B* are coefficient matrices for input and output which are determined from regression based on training data, *u* is the input vector containing temperature setpoints and outdoor air temperature. One month training period operation data from an EnergyPlus virtual building was used in this regression model. An economic objective function is then created accounting for daily electricity cost. This objective function is optimized and incorporated into a MPC module to optimize building temperature setpoint to save electricity cost. 28.52% cost saving has been achieved by this MPC model under the conditions defined in this paper. Another MPC model based on ARX has been published in Ref. [21]. In this paper, single zone optimization, multi-zone optimization cases have been applied and compared. Decentralized, centralized and disturbed MPC have also been compared in multi-zone case. The disturbed MPC was recommended in this study due to its best performance in maintaining thermal comfort and reducing energy consumption, and centralized MPC can provide better thermal comfort than decentralized approach, while decentralized approach can save more energy than centralized MPC. Eisenhower et al. recently developed a meta-model using regression techniques and used it to examine the optimal tradeoff between comfort and energy [22]. In this study, the author achieved 45% annual energy reduction by using the meta-model and an optimization function. This optimization was performed using a cost function that balances the influences of both comfort and energy consumption (Eq. (4)):

$$J = \mathrm{PMV}^2 + \frac{\text{energy} - \min(\text{energy})}{\max(\text{energy} - \min(\text{energy}))} \quad (4)$$

Artificial neural network (ANN) is another popular method in building energy modeling for building operation purpose. In particular, the adaptability of ANN models through a self-tuning process, which is different from mathematical models such as regression models, makes accurate decisions under the disturbance. Moon and Kim proposed a thermal comfort control method using an ANN based model to enhance thermal comfort in residential buildings [23]. Yokoyama et al. [24] used a back propagation neural network to predict cooling demand in a building. The energy demand was predicted using its measured or predicted values as well as the predicted values of air temperature and relative humidity. This approach was applied to the prediction of the cooling demand in a building used for a bench mark test of a variety of prediction methods to validate its effectiveness. Hou et al. [25] predicted the building cooling load by combination of rough set theory and ANN. In this study, rough set theory was applied to find relevant factors to the load, which are used as inputs of an artificial neural-network to predict the cooling load. Data fusion technique was also applied to improve the prediction accuracy. Adaptive ANNs for on-line building energy prediction was investigated by Yang et al. [26]. These models are capable of adapting themselves to unexpected pattern changes in the incoming data, and therefore can be used for the real-time on-line building energy prediction, which is the fundamental for building on-line optimal control.

Black box models are easy to build and computationally efficient, however, such models often require long training period and are bounded to building operating conditions that they are trained for which sometimes can cause huge forecasting error when training data does not cover all the forecasting range.

2.3. Gray box model

Gray box models are hybrid models that use simplified physical descriptions to simulate the behavior of building energy systems. Using the simplified physical models reduces the requirement of training data sets, and calculation time. Model coefficients are identified based on the operation data using statistics or parameter identification methods. A unique three-step process was developed for developing and training the gray models in a previous study [27]:

1. Develop the simplified physics models for building;
2. Bounds on physical parameters are estimated from a rough description of the building geometry and materials;
3. A rough parameter identification algorithm is used to determine estimates of model parameters;
4. A pierces parameter identification algorithm is used to determine optimal parameters that minimize errors between model prediction and real measurements;
5. Apply coefficients in the simplified models to simulate building operation.

In this study, a resistance and capacitance network (RC) was proposed to model and predict building cooling load (Fig. 4). The benefit of this RC model is its physics representation and computation efficiency. In this gray model, capacitors represented the thermal capacitance, and resistors between the nodes represented the thermal resistances of building envelope and indoor mass. The values of resistances and capacitances were determined by “non-linear regression” method of on-site measured operation data. The RC network captures the heat transfer in building envelope and thermal mass, which is able to simulate the building dynamics better than black box models. The parameters, *R*s and *C*s, are identified through statistics methods which is easier than that in white box models. The authors found that one to two weeks of data were sufficient to train the model so as to predict transient cooling load accurately. In order to determine the sensible cooling load and zone temperature from temperature setpoints and weather conditions, three control cases were analyzed in this paper:

1. Zone temperature is maintained at the temperature setpoints over the time step;
2. Zone temeratuere is varied between initial and final values over the time step;

3. Floating temperatures with cooling system off or providing a specified sensible zone cooling rate which is not enough to maintain zone tempeature at the setpoints.

This gray model structure is the most common building load predicting model and is widely used in on-line building optimal control and demand response now. The fundamental equation was presented in Eq. (5) [28]:

$$\dot{Q}_{zs,k} = \sum_{i=0}^{N} (a_i T_{a,k-i} + b_i T_{z,k-i} + c_i \dot{Q}_{g,s,k-i} + d_i \dot{Q}_{sol,k-i}) + \sum_{i=1}^{M} e_i \dot{Q}_{zs,k-i} \tag{5}$$

where, $Q_{z,k}$=sensible cooling requirement for stage k, $T_{a,k}$=ambient temperature for stage k, $T_{z,k}$=zone temperature set point for stage k, $Q_{g,s,k}$=total sensible internal gains (e.g., lights, people, equipment) for stage k, $Q_{sol,k}$=total incident solar radiation on all exterior zone surfaces for stage k.

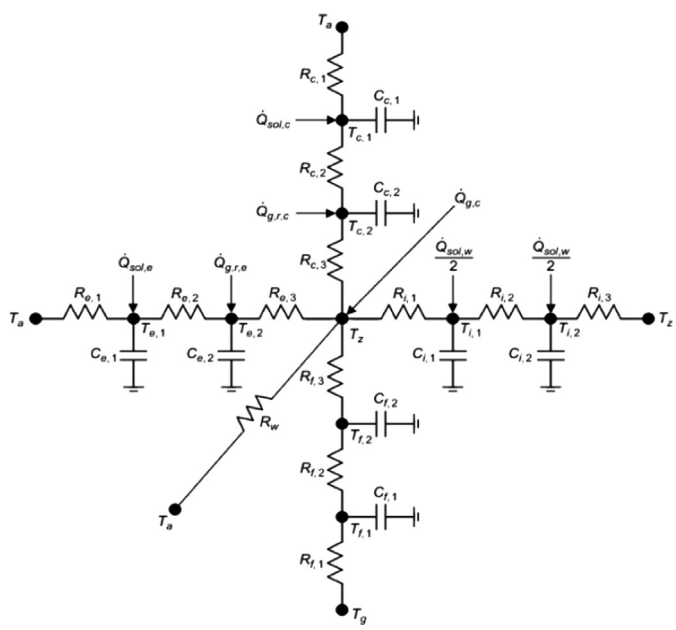

Fig. 4. Thermal network for overall building model.

Nonlinear regression was applied in this study to determine the coefficients of Eq. (5), which minimized prediction errors. Results from this model matched the detailed simulation for transient cooling load within 2%, compared to detailed physics model (TRNSYS) when one-year's hourly data was used to train the model. This RC model structure has further been utilized in a model based demand control of building thermal mass [29]. Energy balance at each node in Fig. 4 has been modeled by a state space formulation (Eqs. (6) and (7)).

$$\frac{dx}{dt} = Ax + Bu \tag{6}$$

$$Y = Q = Cx + Du \tag{7}$$

where Q is the building sensible heat gains, A, B, C, and D are parameter matrices containing the coefficients of each resistor and capacitor, and x and u are system state and input vectors. The system state vector contains the temperature at each node, and the input vector contains the zone temperature setpoints, ambient temperature, and ground temperature, solar radiation absorbed on external walls and on the roof, internal radiative gains for the floor, external walls, and internal walls, solar radiation transmitted through windows that is absorbed on the floor, and internal convective gains to the interior air.

Instead of using nonlinear regression, global and local searching optimization algorithms were used to determine the parameters, which can improve the parameter identification speed and accuracy. This model was able to predict building cooling loads within 5% error, compared to TRNSYS model, when it was trained upon two-week's real building operation data. Upon this RC model, a temperature setpoint optimizer was created to reduce peak load and energy consumption. The results showed that peak load reduction was about 30% with zone temperatures maintained within the comfort range when compared to conventional control for a peak demand period: 1 pm–6 pm.

Wang and Xu developed a similar simplified whole building level energy model in Ref. [30]. Different model structure, however, has been created in modeling external and internal envelopes due to their different dynamics characteristics. Fig. 5 is the schematic of

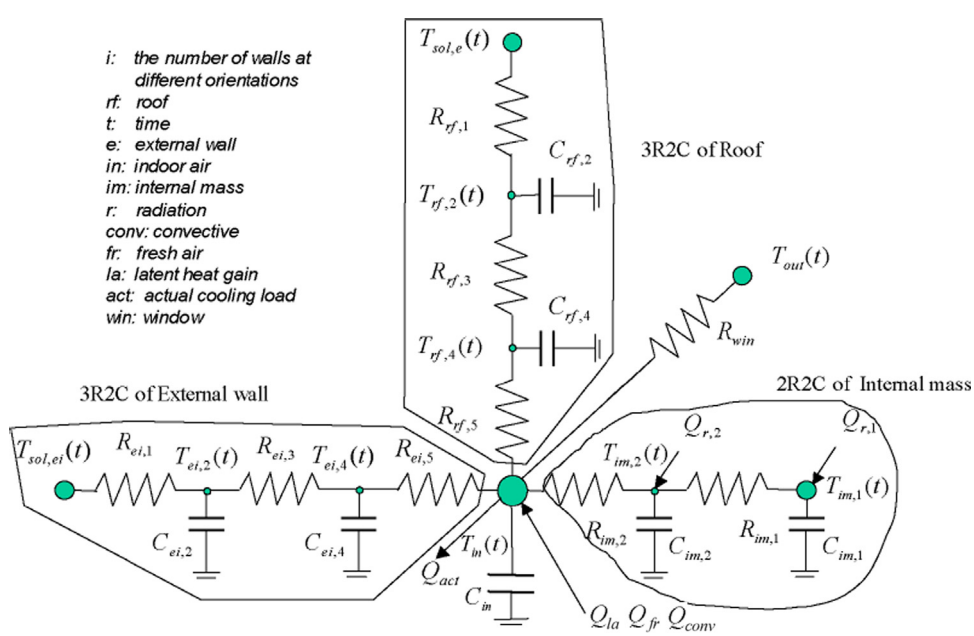

Fig. 5. Schematics of the simplified building energy model.

this building energy gray model. In this model, building external envelopes and roof were considered as the 3R2C (three resistances and two capacitances) model while the building internal mass was modeled as a 2R2C model. They were modeled differently because external envelopes and the roof were directly affected by the outside environment, which had more changed and dynamics. The parameters in this network were determined by using genetic algorithm (GA) estimators based on frequency response characteristic analysis. The GA estimators determined the Rs and Cs through minimizing the difference between RC network results and real measurements. Zhou et al. [31] developed an on-line next day building load prediction model for building energy efficient control, by using the gray box building energy model developed in [30] and a weather forecasting model. The results of this study show that this building load prediction method is suitable for the on-line prediction of building load for the coming day and coming hours, whose mean of absolute percentage error is below 8%. The details about this weather forecasting model will be discussed in Section 4.1.

Similar to the studies discussed above RC model has also been utilized in several MPC models to save energy consumption and energy [32–37]. Oldewurtel et al. [38] developed a new MPC strategy for building climate control. This controller used weather forecasts in a RC model to compute how much energy and which low/high energy cost actuators are needed to keep the room temperature in the required comfort levels. Different to the models discussed previously, they modeled the building zone by zone individually and then aggregated them together. Each zone model can be expressed as a state space model (Eq. (8)).

$$V_{k+1} = A_V V_k + B_u u_k + B_v v_k + \sum_{i=1}^{m} [B_{(vu,i)} v_k + B_{(xu,i)} V_k] u_{k,i} \tag{8}$$

where $V_k \in R^n$ is the state vector, $u_k \in R^m$ is the input, such as temperature setpoint, and $v_k \in R^p$ is disturbance, such as outside temperature, solar radiation), and A_V, B_u, B_v, $B_{(vu,i)}$, and $B_{(xu,i)}$ are parameter matrices. In order to improve the prediction accuracy, a Kalman filter was used to update the weather forecast for every 12 h on an hourly basis with the incoming new measurements.

It is common knowledge that parameter identification of RC models are time and computational demanding, hence studies start to increase the calculation speed by incorporating with data fusion schemes or model reduction. An integrated 3R2C and EKF (Extended Kalman Filter) model was developed to estimate the building energy consumption in Ref. [39]. In this work, an EKF was used to estimate the state vector X using real sensor measurement data (Fig. 6). The variance of modeling error and sensor noise is required for the filter and it is difficult to determine. This study assumed that the process noise covariance Q and measurement noise covariance R (Eq. (9)). The estimated load matched the EnergyPlus results within 10% at 93% of the time.

$$Q = 1 \times I(10,\ 10), \quad Q(10,10) = 10^5$$
$$R = 1 \tag{9}$$

This RC and EKF approach has also been utilized in [40], where self-adaptive thermal building model was developed based on a 1R1C model and an EKF. The 1R1C building energy balance model is represented by Eq. (10):

$$C_r \frac{d}{dt} T_r = \frac{1}{R_{r2a}} (T_a - T_r) + \dot{Q}_{sol} + \dot{Q}_{load} + \dot{Q}_{Occ} \tag{10}$$

where C_r is the room thermal capacitance, T_r is the room temperature, R_{r2a} is the thermal resistance between room and outside air, $\dot{Q}_{sol}$, $\dot{Q}_{load}$, $\dot{Q}_{Occ}$ are solar heat gains, building HVAC load, occupancy heat gains, respectively. The state-space model based nonlinear discrete-time EKF is then developed as Eq. (11).

$$\begin{cases} Z_k = \begin{bmatrix} x_k \\ \theta_k \end{bmatrix} = \begin{bmatrix} F(\theta_{k-1}) x_{k-1} + G(\theta_{k-1}) u_{k-1} \\ \theta_{k-1} \end{bmatrix} + \begin{bmatrix} G_x \\ G_\theta \end{bmatrix} \omega_{k-1} \\ y_k = H(\theta_k) x_k + v_k \end{cases} \tag{11}$$

Certain assumptions were made upon this equation in order to apply EKF: process noise (ω) and measurement noise (v) are uncorrelated white noises. Then the resulting EKF update step for the estimated augmented state vector is Eq. (12).

$$\begin{cases} \hat{x}_k = F(\hat{\theta}_{k-1}) \hat{x}_{k-1} + G(\hat{\theta}_{k-1}) u_{k-1} + L_{x,k} [y_k - H(\hat{\theta}_{k-1}) \hat{x}_{k-1}] \\ \hat{\theta}_k = \hat{\theta}_{k-1} + L_{\theta,k} [y_k - H(\hat{\theta}_{k-1}) \hat{x}_{k-1}] \end{cases} \tag{12}$$

In Eqs. (11) and (12), x_k, u_k, and y_k are state, input, and output vectors, respectively. $L_{x,k}$, and $L_{\theta,k}$ are Kalman gains for the state and parameter updating. This 1R1C and EKF model can reduce parameter identification time and calculation burden. 1R1C sacrificed the estimation accuracy which would be made up by incorporating real measurements through EKF. Thus the balance between process noise covariance and measurement noise covariance determination is crucial to the model accuracy and robustness. Unfortunately, neither of these two studies has discussed the details about the determination of process noise covariance and measurement noise covariance, and even the correlation between these two noises.

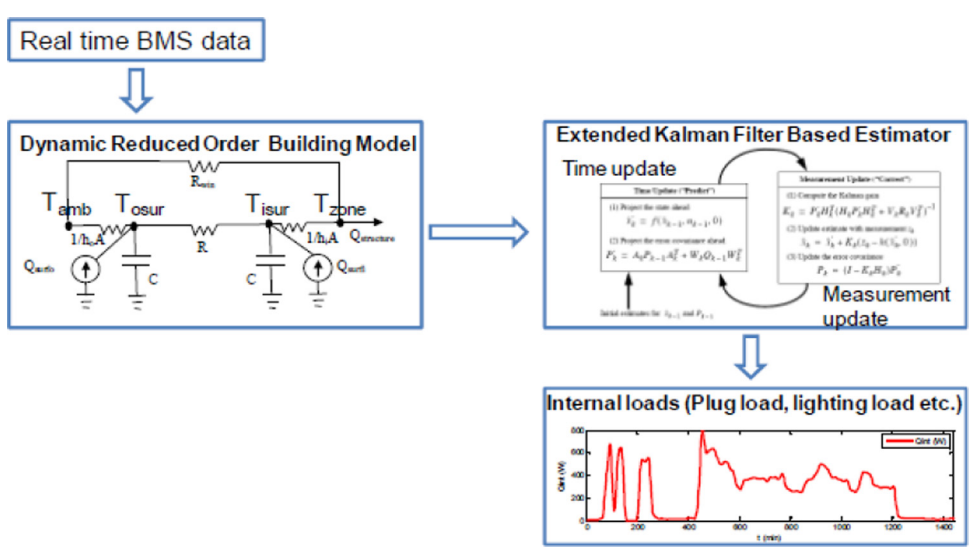

Fig. 6. Schematic of RC and EKF real time load estimator.

Besides integrating data fusion techniques, model reduction methods have also been reported in the literature to improve gray model performance. Ma et al. [41] presented a RC model reduction method based on balanced realization. A high order state-space model was firstly developed based on the EnergyPlus simulation results. Then the order of the building is reduced by balance truncation based on the Hankel matrix singular values. This reduced model was implemented in an economic MPC model to control the building temperature setpoint. Due to the calculation efficiency of this reduced model, the whole MPC optimization running time was reduced from 50 min to 28 min. A fourth-order multiple-input, single-output model (Fig. 7) was developed by Candanedo et al. [42]. G_{ET}, G_{SG}, G_{IG}, and G_{CP} are transfer function for outdoor temperature, solar radiation, internal gains and cooling power respectively. System identification toolbox in MATLAB was applied to training the model in Z-domain first, and those transfer functions were converted into T-domain. This model was then written in a state-space representation (Eq. (6)), where sensible cooling power was chosen as one of the inputs in u. Sensible cooling power was back calculated after state variable $X(1)$ and indoor temperature measurement Y were known by Eq. (13).

$$u = \Delta^{-1} \times [Y - \Phi \times X(1)] \tag{13}$$

This building thermal dynamics model was incorporated in a chiller model and an ice tank thermal storage model to calculate the building electricity consumption. The details about the ice tank model will be discussed in Section 3.2. In order to optimize the operation of the chiller, ice tank and the building, an optimization model was developed and solved under the proposed real-time electricity pricing profile and weather condition. Eq. (14) states the objective function of this optimization problem, C_i is the electricity price, and P_i is the electricity consumption of the building at time step i. Certain constraints have also been added into this optimization model, such as an ice tank can only be charged at night, and chiller capacity is 110 kW at daytime or 170 kW at nighttime, etc.

$$J = \sum_{i=1}^{n} C_i P_i \tag{14}$$

MPC has become a widespread solution in building optimal control. Different building modeling approaches have been tried to get better estimation accuracy and reduce calculation time. Privara et al. [43] presented a systematic method to select an appropriate building model for building operation and control. In this study, different modeling approaches, such as subspace identification model, probabilistic semi-physical model, and deterministic semi-physical model, have been discussed and compared. A two-stage model selection criterion has been proposed and validated in this paper. They concluded that the model with a minimum set of disturbance inputs was chosen in the first stage, and then the minimum set of system states maximizing the model quality was selected at the second stage.

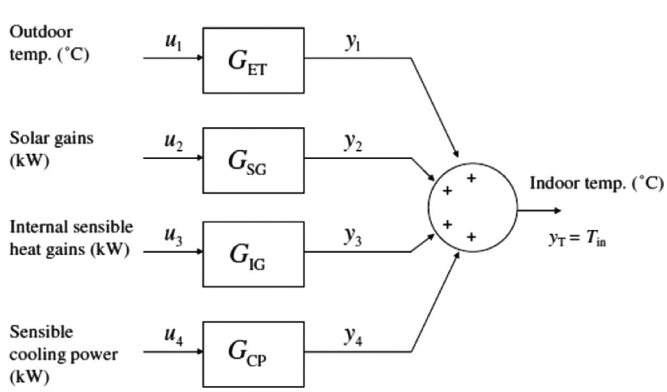

Fig. 7. Building thermal dynamics system model.

In previous sections, whole building energy modeling for building operation has been discussed. In most of the circumstances, whole building energy models are not enough to full control building energy systems, such as power generation and storage system. As a result, the studies about modeling of building critical component, such as photovoltaic (PV) power generation, battery and ice tank energy storages, will be reviewed in the following sections.

3. Building critical component modeling

3.1. Photovoltaic power generation modeling

PV panel is a common on-site energy generation device. Lots of existing studies are focusing on PV panel modeling and prediction to reduce energy consumption and cost. Sandia Nation Laboratories (SNL) provided a detailed description of the PV module model in Ref. [44]. The output current of the PV array can be expressed as Eq. (15):

$$I_P = MI_l - MI_o\left[\exp\left(\frac{q(NV + (I_p R_s N/M))}{NAKT_p} - 1\right)\right] - \left[\frac{NV + (I_p R_s N/M)}{NR_{sh}/M}\right] \tag{15}$$

where I_p=output current of panel (A), I_l=light generated current per module (A), I_o=reverse saturation current per module (A), M=number of module strings in parallel, N=number of modules in each series string, V=terminal voltage for module (V), R_s=diode series resistance per module (ohms), R_{sh}=diode shunt resistance per module (ohms), q=electric charge (16–19 C), k=the Boltzmann constant (13.8–23 J/K), A=diode ideality factor for the module, and T_p=cell temperature (K).

The National Institute of Standards and Technology (NIST) created a building integrated PV test bed to collect experimental data to improve simulation models [45]. Twelve-month's experiment data was collected and compared with the simulation results of SNL's model. The agreement of annual energy output predictions from SNL model and NIST test bed is within 7%. Lu et al. [46] developed a simple, practical model to describe the characteristics of power output of PV modules (Eq. (16)). This model represented the I–V characteristics of PV modules based on the equivalent circuits of solar cells. The power output model was developed upon this I–V characteristics model.

$$I = I_1 - I_{01}\left[\exp\left(\frac{V + R_s I}{V_t}\right) - 1\right] - I_{0m}\left[\exp\left(\frac{V + R_s I}{mV_t}\right) - \frac{V + R_s I}{R_p}\right] \tag{16}$$

where I is the current generated by the solar cell, I_1 is the light-generated current, I_{01} is the reverse-saturation current of ideal diode, V is the voltage generated by the solar cell, R_s is the series resistance of the solar cell, V_t is thermal voltage depending on the cell temperature, I_{0m} is the reverse-saturation current of the non-ideal diode, zero in ideal case, R_p is the leakage resistor, and m is a constant.

Jones and underwood developed and validated a series of PV module electrical models based on the PV fill factor method taking solar radiation and temperature characteristics into account [47]. The PV power output from array can be estimated from fill factor (FF), short circuit current under stander temperature and irradiance (I_{sco}), solar irradiance on a tilted panel (G), standard irradiance (G_0), open circuit voltage (V_{oc}), module temperature (T_m), standard module temperature (T_0), number of PV modules (N_m), and the

inverter efficiency (η_{in}):

$$P_{array} = FF\left(I_{sco}\frac{G}{G_0}\right)\left(V_{oc}\frac{\ln(k_1 G)}{\ln(k_1 G_0)}\frac{T_0}{T_m}\right)N_m\eta_{in} \quad (17)$$

This model was validated against a real building-integrated 39.5 kW PV array operation data over a period of one year. ANN method was applied by Mellit et al. for a PV generator model, a battery model, and a PV regulator model [48]. Levenberg–Marquardt algorithm and infinite impulse response filter were used to accelerate the calculation speed. The correlation coefficient between predicted and observed value varies from 90% to 96% for each estimated signal. Kim et al. [49] presented a grid-connected PV system model for transient analysis. The modeling and simulation in this study were realized in PSCAD/EMTDC, a widely used power system simulation tool. This model is capable to analyze the dynamic behavior of the power system, such as the controller operation, and anti-islanding performance. Hernandez et al. [50] presented a methodology to predict the behavior of a gird-connected PV system from measurements of solar radiation and ambient temperature in a statistically reliable way. This methodology allows determining the probability density functions representing statistically the behavior of PV system under the uncertainty of weather conditions. The solar resource characteristics and the photovoltaic system models are integrated into a non-deterministic approach using the stochastic Monte Carlo method. The accuracy of this model depends mainly on the quality and availability of on-site meteorological data. Henze and Dodier developed a simple PV power generation model and investigated an adaptive optimal control of a grid-independent PV system consisting of PV panel, electricity storage and a building load [51]. Q-learning method was used to determine the control strategy of this system. They compared the operation of PV-priority and Q learning optimal control. The results illustrated that the adaptive controller held back the stored energy in order to be able to meet the critical loads in the future when the electricity price is higher, which can shave the peak electricity demand by about 50%.

Sukamongkol et al. [52] developed a simulation model for PV system under certain load requirements and meteorological conditions. This model contains of PV array, battery, controller, inverter and a load model. The PV array power output model is the same as the model in [44]. The operation of this model is illustrated in Fig. 8. The weather condition data is sent into the PV array model to determine the power generated data. At the same time, the load model will determine the power demand. The controller model will regulate the operation mode of the PV panel to determine when to power the load and when to charge the battery. In additional, this controller will determine the operation of batteries. The battery model will be discussed in Section 3.2.

3.2. Energy storage modeling

Building electricity demand at peak hours is much higher than that at off-peak hours. With the implementation of intelligent grid technologies such as smart grids, smart metering, smart pricing and other demand management, consumers have the control over their power consumption, and decide when to purchase power and how much they consume, and the utilities may decide peak and off-peak prices. Energy storage is a very important part of building energy system to eradicate the discrepancy between energy supply and energy demand, especially for the buildings with on-site generation. The energy storage devices, such as battery and thermal energy storage, are able to shift part of the electrical load from peak hours to off-peak hours to reduce the overall electricity cost. What's more, the energy storage devices can power the building during the public electricity supply outage time. In this section, the studies about the two most common energy storage devices will be reviewed and discussed.

3.2.1. Battery electricity storage

For the purpose of peak demand shaving and dispatching, numerous studies on the electricity storage are being reported in

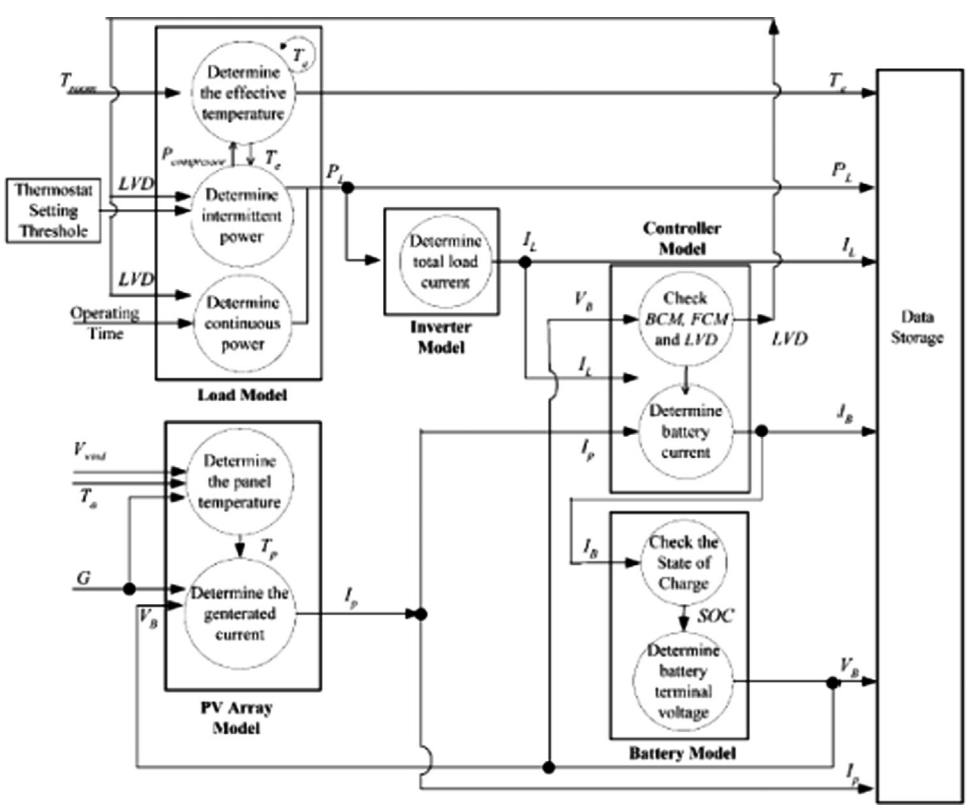

Fig. 8. Operation of PV system model.

many publications. The benefit of coupling battery system with on-site generation has been shown in [53], where electricity generated in PV panel can either be used by building or stored in battery which enhances the economic potential of both systems beyond a simple sum of benefits that one might expect.

Nair and Garimella [54] discussed and assessed battery energy storage technologies from a technical and economic perspective in SIMULINK. An overview of various small-scale energy storage technologies followed by a modeling framework to assess the benefits of battery as an integral component of a renewable energy technology, such as PV systems, was provided in this paper. The battery system in this paper was modeled by a generic function block obtained from the *SimPowerSystems* toolbox in Simulink. Results from this simulation model showed that NiMH batteries have the highest potential for development in small-scale on-site energy integration applications. In spite of a poor technical performance, affordability and availability are two factors leading to dominant use of lead-acid batteries in renewable energy systems. Leadbetter and Swan [55] presented a battery energy system modeling approach for electricity demand peak shaving. Five-min time step electricity profiles were fed into the energy storage model with the objective of reducing the peak electricity demand by optimization of the schedule of charging and discharging. They concluded that Peak demand reductions of between 42% and 49% were achieved by using 5 kW h or 8 kW h capacity battery energy storage systems. McKenna et al. [56] developed a novel battery model to study the economic impact of the battery for the occupants takes into account current U.K. feed-in tariff arrangements. The model can estimate the battery efficiency under varying rates of charge and discharge, as well as varying states of charge. They also quantified the operational energy losses by using the concept of voltage efficiency and coulombic. The overall energy efficiency of the battery can be viewed as the product of the battery's voltage and coulombic efficiencies. A similar simplified battery model was developed in a precious study [57], as Eqs. (18) and (19):

$$SOC_{t+\Delta t} = \begin{cases} SOC_t + \frac{I_{\mathrm{bat},t}\Delta t\ \eta_t}{C_{\mathrm{bat}}}, & \text{charging} \\ SOC_t - \frac{I_{\mathrm{bat},t}\Delta t}{C_{\mathrm{bat}}}, & \text{discharging} \end{cases} \tag{18}$$

$$I_{\mathrm{bat},t} = \begin{cases} \min\{0.15C_{\mathrm{bat}}, \quad (SOC_{\max} - SOC_t) \times C_{\mathrm{bat}}/(\eta_t \Delta t)\}, & \text{charging} \\ \min\{0.15C_{\mathrm{bat}}, \quad (SOC_{\max} - SOC_t) \times C_{\mathrm{bat}}/\Delta t\}, & \text{discharging} \end{cases} \tag{19}$$

where SOC_t is the state of charge at time t; $I_{\mathrm{bat},t}$ (A) is the charging/discharging current at time t; Δt (h) is the simulation time interval, which is 1 h; C_{bat} (Ah) is nominal battery capacity; η_t is the round efficiency of the battery at time t. $SOC_{\max}$ is the maximum state of charge which is 1.0 in this research; $SOC_{\min}$ is the minimum state of charge which is 0.5 in this research.

The terminal voltage $V_{\mathrm{bat},t}$ (V) of the battery at time t is expressed in terms of its open circuit voltage, $V_{oc,t}$, and the voltage drop across the internal resistance of the battery (Eq. (20)). $V_{oc,t}$ is calculated as Eq. (21):

$$V_{\mathrm{bat},t} = V_{oc,t} - I_{\mathrm{bat},t} R_{\mathrm{bat},t} \tag{20}$$

$$V_{oc,t} = VF + b \times \log(SOC_t) \tag{21}$$

where VF (V) is the full charge rest voltage, b is an empirical constant, and $R_{\mathrm{bat},t}$ is the internal resistance of the battery. All of these three are parameters from the manufacture catalog.

A fundamental transport based model of lithium ion battery has been used to create a battery module based on Gao equivalent circuit model [58] in ESP-r for residential energy storage by Darcovich et al. [59]. This study evaluated the annual residential energy use in a typical Canadian home connected to the electrical grid, equipped with a micro-cogeneration system consisting of a sterling engine for supplying heat and power, coupled with a nominal 2 kW/6 kW h lithium ion battery (Fig. 9). It was found that the complex nature of a multi-piece micro-cogeneration system benefits to a great extent from usage scenario simulations due to the specific capacities and outputs of the components. In the scenario tested in this study, the battery can reduce daily power consumption from electrical grid by 30%.

3.2.2. Ice tank thermal energy storage

Besides battery electrical storage system, ice tank thermal energy storage system is another building energy management equipment. Building operator can also use ice tank to shave the high electricity demand for cooling load during peak hours associated with real time electricity price. In order to fully utilize the peak demand shaving, an accurate and efficient ice tank thermal storage model is needed.

West and Braun presented and validated an empirical model for simulating an ice tank [60]. The basic physical heat transfer of the ice tank model is modeled by Eqs. (22)–(24)–:

$$X_k = X_{k-1} + \frac{u_k \Delta t}{Ca_s} \tag{22}$$

$$u = \varepsilon_c m_f c_f (T_s - T_{f,i}) \tag{23}$$

$$\varepsilon = \frac{T_{f,i} - T_{f,o}}{T_{f,i} - T_s} \tag{24}$$

where X is the ice storage state (state of charge), u is heat transfer rate (charging/discharging rate), Ca is the storage capacity, ε is heat transfer effectiveness, m_f is second fluid mass flow rate, c_f is the specific heat of second fluid, T_s, $T_{f,i}$, and $T_{f,o}$ are melting/freezing temperature, second fluid inlet, and outlet temperature, respectively. Empirical studies have been conducted to determine the heat transfer effectiveness, ε, at different states of charge (SOC) and other situations. The overall predicted charging and discharging effectiveness were within about 4% of real field measurements.

Ihm et al. [61] developed an ice tank TES module and integrated it with EnergyPlus. The configuration of this TES is illustrated in Fig. 10. This model is based on a previous study in Ref. [60]. Three different operation modes, namely dormant mode, charging mode and discharging mode, were modeled and validated. When the TES system is in dormant mode, the charging/discharging rate, u, is zero. In charging mode, TES SOC is

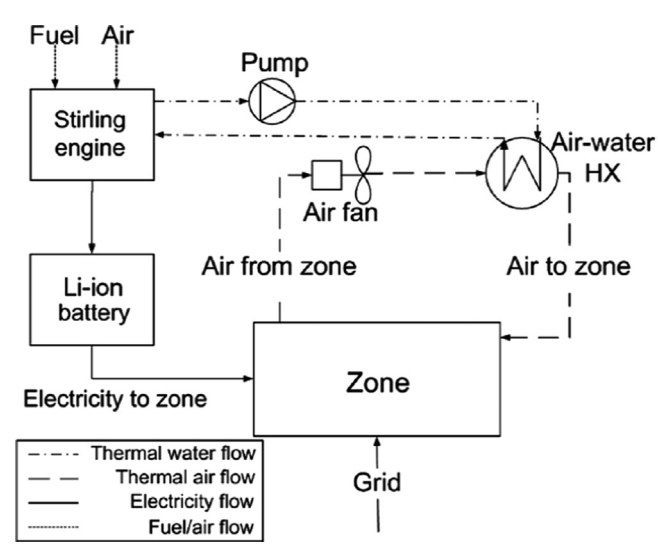

Fig. 9. Plant system schematic for application demonstration.

calculated in Eq. (25). During the discharging period, the TES system provides cooling to meet the cooling demand from the supply side. The TES water flow rate, $\dot{m}_{ice}$, is adjusted based on the load request, $\dot{Q}_{ice}$, and inlet chilled water temperature, T_{inlet}, as Eq. (26):

$$SOC_t = u\Delta t + SOC_{t-\Delta t} \tag{25}$$

$$\dot{m}_{ice} = \frac{\dot{Q}_{ice}}{C_p(T_{inlet} - T_{stp})} \tag{26}$$

where C_p is the specific heat of inlet water, T_{stp} is the supply water temperature setpoint.

Based on one of benchmark building EnergyPlus models provided in [11], Sehar et al. [62] analyzed the chiller energy consumption of conventional non-storage and ice storage cooling systems for large and medium-sized office buildings in different climate zones. The ice tank model in this paper is based on EnergyPlus ice storage model [61]. The impact of ice storage on the building energy consumption in different cities, such as Miami, Las Vegas, Baltimore, Seattle, Chicago, Helena, and Duluth have been analyzed and compared. From their results, they concluded that with full storage ice tank there was no energy consumption at peak hour, round 50% peak hour energy consumption reduction with storage priority operation, and 25% reduction with chiller priority operation. The parameters of the chiller and building load used in that paper were summarized in Table 1 [62]. They found out that the ice storage systems had higher chiller energy consumptions than the conventional non-storage systems due to the night dedicated chiller operation. But the ice storage system can reduce or even eliminate the chiller operation during the peak hours, which can save energy cost. Climate zones with summers having high temperatures and relative humidity ratio increase not only the building cooling load but also the chiller energy consumption by decreasing the cooling of condenser water.

Henze et al. [63,64] developed and validated a simulation environment for the evaluation of the performance of various controls of ice storage system. Chiller-priority, constant-proportion, and storage-priority control strategies was compared to the optimal control strategy that achieves the theoretical maximum of operating cost savings. Dynamic programming based global search in peak and off peak demand domains was applied to find out the ice tank storage optimal operation schemes. A set of ice storage system's operation guidelines under different conditions were

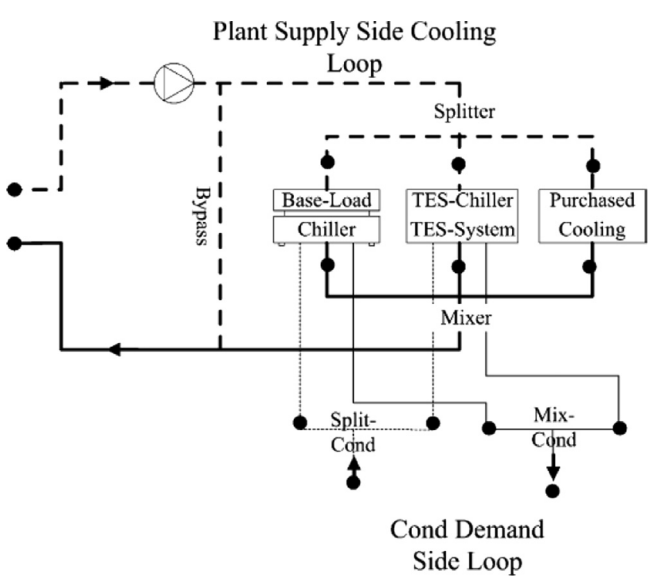

Fig. 10. TES system configuration within EnergyPlus.

Table 1
Ice storage system parameters [62].

	Unit	Large office	Medium office
Total integrated cooling load	kW h	31.21	3.431
Full storage	Chiller (kW)	2040	224
	Storage (GJ)	112	12
Partial storage: storage priority	Chiller (kW)	1576	173
	Storage (GJ)	56	6
Partial storage: chiller priority	Chiller (kW)	1100	130
	Storage (GJ)	25	2.5

identified to improve the load-shifting performance of different control schemes. Hajiah and Krarti [65,66] presented a novel simulation environment which can analyze the benefit of ice storage system as well as building thermal mass simultaneously to reduce the energy cost while maintaining occupant comfort. The optimal objective function, as described in Eq. (27), was adopted from [63].

$$C = r_{d,o}P_{\max,o} + r_{d,1}P_{\max,1} + \sum_{k=0}^{K} r_{e,r(k)}P(k)\Delta t \tag{27}$$

where C is the total cost including energy and demand charges ($), $r_{d,o}$ is the off-peak demand charge ($/kW), $r_{d,1}$ is the peak demand charge ($/kW), $P_{\max,o}$ is the off-peak electricity demand, $P_{\max,1}$ is the peak electricity demand, r_e is the energy charge ($/kW h), k is the number of hours in each simulation period, $P(k)$ is the total power consumption at time k.

Direct search complex method was used to solve the nonlinear constrained minimization objective functions. Several other optimization methods have also been investigated to improve the effectiveness of the ice storage system. Based upon the optimal operation control schemes, round 10.8% total cost saving, including base cost and demand cost, was achieved in a laboratory located in Boulder, CO. The results of the validation analysis indicated that the simulation environment predict cost savings for optimal controls with 10% agreement when compared to the experimental measurements. Quasi-Newton method was investigated by Henze at al. [67] to optimize the building operation in response to time-of-use electricity rate by using a ice storage system and building thermal mass. They concluded that when an optimal controller was given perfect weather forecasts and when the building model used for predictive control matched the actual building, utility cost savings and on-peak electrical demand reductions were substantial. Chen et al. [68] explored the optimization of ice storage air conditioning system by using dynamic programming algorithm. They developed the chiller power consumption models as well as the ice tank storage heat transport model based on manufacture data. The initial cost and operation cost are objective functions. The ice storage tank was modeled as a heat exchanger, which discharging rate Q_{ice} was expressed as:

$$Q_{ice} = UA_{ice} \times \Delta T_{lm,ice} \tag{28}$$

$$\Delta T_{lm,ice} = \frac{(T_{ice,in} - T_f) - (T_{ice,out} - T_f)}{\ln((T_{ice,in} - T_f)/(T_{ice,out} - T_f))} \tag{29}$$

where $T_{ice,in}$, and $T_{ice,out}$ are inlet and outlet brine temperature, and T_f is freezing temperature of water, i.e. 0 °C.

Massie [69] developed and tested a neural network-based optimal controller for an ice tank thermal energy storage system. This controller can self-learn the behavior of equipment and then determine the system operation scheme to minimize its operation cost. The controller consists of four neural networks, three of which map equipment behavior and one that acts as a global controller. The ice tank controller consists of a training and a

predictor network working in parallel (Fig. 11). The training network captures the relationship between controlled variables and other ice tank performance variables, such as chilled power consumption, and ice tank charging/ discharging rate. This optimal control model does not rely on any rules or assumptions, it can find out the optimal operation solution at any pricing structure, building load profile and equipment operation conditions.

4. Building energy modeling for demand response

Demand response (DR) is end-use customer reducing or shift building electricity consumption in response to power grid signals. DR programs benefit customers by reducing energy cost and enhancing the reliability of the electricity system. DR has been identified as a key strategy to improve electric grid reliability and to incorporate the on-site power generation. As the basis of DR programs, building energy and control models can determine building operation strategies taking weather condition, power grid signals, building integrated energy storage, and on-site generation information into account.

4.1. Weather condition forecasting for building energy prediction

Weather condition predictions, especially solar radiation, ambient temperature and so on, are very important parameters in building energy forecasting models. Usually, meteorological forecast uses large-scale atmospheric models, satellite images, surface observation, and weather change trend prediction. Hence, the forecasting at specific spot is not very precise. Moreover, on-line short term weather prediction is the essential part of on-line building energy modeling and building operation optimization.

4.1.1. Solar radiation forecasting for photovoltaic power

A number of building energy modeling and building operation researches with short term solar radiation have been undertaken in the past twenty years, using different statistical methods, such as autoregressive moving average (ARMA) [70–72], artificial neural networks [73–75]. The general approach for PV panel power generation estimation is: (i) estimating the total solar irradiance on the tilted surface of the PV panel from overall global solar radiation on the horizontal surface, (ii) calculating absorbed solar irradiance based on the solar irradiance on the PV cell surface, and (iii) computing the PV power generation from absorbed solar irradiance. The total solar irradiance on the inclined surface (G_{tt}) can be calculated in terms of direct beam (G_{bt}), sky diffuse (G_{dt}) and ground reflected (G_{rt}) solar irradiance individually:

$$G_{tt} = G_{bt} + G_{dt} + G_{rt} \tag{30}$$

Traditionally, direct beam solar radiation calculation is straight forward from beam solar radiation on a horizontal plane, incidence (θ) and solar zenith (θ_z) angles [76] (Eq. (31)).

$$G_{bt} = G_{bh}\frac{\cos\ \theta}{\cos\ \theta_z} \tag{31}$$

Ground reflectance solar radiation is usually estimated by Eq. (32) [76]:

$$G_{rt} = \frac{\rho_0}{2}G_{th}(1-\ \cos\ \beta) \tag{32}$$

where G_{th} is the total irradiance on a horizontal plane, and ρ_0 is ground reflectance, and β is the slope angle of the tilted surface. The isotropic sky model is the simplest model with the assumption that all diffuse solar radiation is uniformly distributed over the sky [77].

However, there are a lot of new techniques to estimate the solar radiation on PV panels, especially to estimate the diffuse solar irradiance. ARMA model, taking deterministic annual and diurnal periodicity and the variation of weather condition variables into account, was used by Yoshida and Terai to estimate the ambient air temperature, solar radiation, and absolute humidity. Each weather condition variable was decomposed into deterministic or periodic and random components. The deterministic component was modeled by a Fourier series and the other one was modeled as an ARMA model [71]. Zhou et al. [31] integrated their on-line gray box building energy model with on-line air temperature, relative humidity and solar radiation prediction models to increase the next day hourly building load forecasting accuracy. The regressive empirical solar radiation forecasting model used the forecasted cloud amount, extreme temperatures from the weather stations (Eq. (33)).

$$I_{\text{global}} = I_0\left(a_1 + a_2\sqrt{T_{\max} - T_{\min}} + a_3\sqrt{1-\frac{C}{8}}\right) \tag{33}$$

where X is the forecasting variable, including temperature and relative humidity, a and b are coefficients determined by regression model. In Eq. (33) a_1, a_2 and a_3 are regression coefficients obtained from recursive least square algorithm, I_{global} is hourly

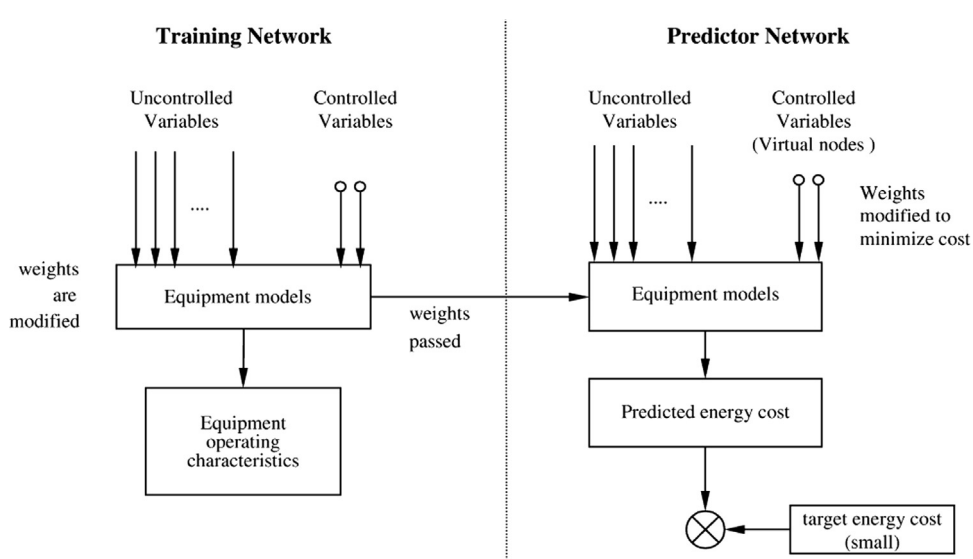

Fig. 11. Architecture of ANN based ice tank controller.

global solar radiation, T_{max} and T_{min} are daily maximum and minimum temperature, C is average daily cloud coverage, and I_0 is hourly extraterrestrial solar radiation. Less than 10% variance between observations and prediction was achieved through this reported model. Coskun et al. [78] proposed and demonstrated a probability density frequency based method for estimating solar radiation distribution. In this study, a case study using 15 years recorded actual global solar irradiation data was conducted to analyze its influence on the performance of solar collectors. ASHRAE [79] provided models for hourly global radiation (I), and hourly diffuse radiation (I_d) on the horizontal surface on a clear day as follows:

$$I = I_N \cos\theta_z + I_d \tag{34}$$

$$I_N = A\exp\left(-\frac{B}{\cos\theta_z}\right) \tag{35}$$

$$I_d = CI_N \tag{36}$$

where θ_z is solar zenith angle. Model parameters A, B and C are given in a lookup table.

Another diffuse solar radiation estimation model was developed and published in [80], where models for daily values of diffuse solar radiation were developed from (i) diffuse fraction or cloudiness index as a function of clearness index, (ii) diffuse fraction or cloudiness index as a function of relative sunshine duration or sunshine fraction, (iii) diffuse coefficient as a function of clearness index, and (iv) diffuse coefficient as a function of sunshine duration or sunshine fraction. Spatial-temporal covariance structures and time-forward kriging approach has been applied by Yang et al. [81]. The methodology in this study lines in two transformations of the real weather data: (i) applying spatial-temporal covariance transformation to obtain spatial stationarity, (ii) reducing the residual sum-of-squares by fitting exponential correlation functions. Boland et al. [82] constructed a logistic model for direct normal solar radiation using solar radiation data from multiple locations, and the performance of this logistic model was then compared with that of Perez model, which turned out that the logistic model performed arguably better that Perez model [83]. Finally, Boland–Ridley–Lauret model [84] was used to obtain hourly diffuse radiation from direct normal solar radiation. Olmo et al. developed a inclined surface solar irradiation $\left(G_\beta\right)$ model based on solar irradiation on horizontal surface (G) with incidence (θ) and solar zenith (θ_z) angles [85]:

$$G_\beta = G\varphi_o \tag{37}$$

$$\varphi_o = \exp[-K_t(\theta^2 - \theta_z^2)] \tag{38}$$

Another recent study developed a solar 3D urban model to calculate the solar energy potential in building roofs and facades [86]. In this study, a digital surface model was built and a solar radiation model was also developed based on climatic observation data. Direct and diffuse solar radiation was then obtained for roofs and facades with considering the shadow effect. The results from this study confirmed that the annual irradiation on vertical facades is lower than that on roofs.

A review paper about the global solar radiation models has been published by Bakirci [87], where 60 models for relating global radiation to sunshine hours, relative humidity ratio, temperature, etc. identified by the author were reviewed and discussed. This paper concluded that the most commonly used parameter for global solar radiation estimation is sunshine duration which is widely available. Khalil and Shaffie [88]compared different models for estimation of total solar radiation on horizontal surface, empirical correlations for global solar energy models on inclined surface, and estimation models for diffuse solar energy models on inclined surface, such as Badescu model [89], Tian et al. model [90], Skartveit and Olseth model [91], Steven and Unswoth model [92], and Perez model [93].

4.1.2. Outdoor temperature estimation for building energy modeling

A five-step procedure of air temperature prediction model development was recommended in [94]: data collection, data examination, data evaluation, prediction model construction, and prediction result evaluation. The weather forecasting model was then applied in an optimal model predictive control for building passive and active thermal storage. The weather forecasting results in this study showed that the bin models which developed based on 30 or 60 days weather data (Eq. (39)) achieved the best prediction accuracy.

$$[\hat{X}_t]_M = \frac{1}{q}\sum_{n=0}^{q-1} X_{t+24n}, \quad t \in [1,24] \tag{39}$$

Here, n is a summation index, q is the number of days in the month M, and t is the time of the day.

The most complex model, a seasonal autoregressive integrated moving average (Eq. (40)) showed the worst accuracy.

$$\hat{X}_t = X_{t-1} + X_{t-24} - X_{t-25} + \varnothing_1[X_{t-1} - X_{t-2} - X_{t-25} + X_{t-26}] + \cdots + \varnothing_7[X_{t-7} - X_{t-8} - X_{t-31} + X_{t-32}] \tag{40}$$

Here, t is the time of the day and $\varnothing$ is the regression coefficients. Florita and Henze [95] further investigation compared the performance of different short term weather forecasting models, including moving average models and nonlinear autoregressive neural network models. They concluded that the exponentially weighted moving average (EWMA) with absolute deviation modifications demonstrated the best performance in short-term predictions of dry-bulb temperature, global horizontal radiation, and relative humidity, rather than the ANNs method. The weighting scheme is that a exponentially decreasing constant applied to each variable according to its distance from t (Eq. (41)).

$$W_t = \sum_{i=0}^{\infty} \alpha(1-\alpha)^i x_{t-\nabla}, \quad (0 < \alpha \le 1) \tag{41}$$

The weighing factor, α, is determined by the system dampen observation. Dovrtel and Medved [96,97] applied discreet Kalman filter to predict the ambient temperature for a specific location, which utilized previous known differences between the observations and forecasting results. The forecasting results from Kalman filter were decomposed using Fourier series. The higher frequencies of temperature components were ignored (depending on the weather constraints) to remove the outliers. The weather forecasting model was then applied in a multi-objective performance optimization project for a building free cooling system. In this study, the optimization problem was separated into two steps: the energy consumption and free cooling potential were estimated based on the weather forecasts; and then, free cooling operation scheme was optimized to reduce energy consumption while meet comfort requirement. Ren and Wright [98] presented an adaptive combined deterministic-stochastic prediction method for temperature and solar radiation on-line prediction. The model can predict external dry-bulb temperature and solar radiation over the next 24 h. In this study, a pure stochastic method, a combined deterministic-stochastic method, and an expanded method for short-term temperature forecast were investigated and compared. An EWMA model has been used to account for the deterministic part, and an AR(4) model for the stochastic part of the temperature. The combined deterministic-stochastic method was recommended due to its higher forecasting accuracy. This model was applied to two sets of the U.K. Chartered Institution of Building Services Engineers (CIBSE) example weather year weather data, which achieved around 1.8 K mean absolute error and less than 2.4 K root mean square error with no bias in the predictions.

4.2. Single building optimal control for demand response

It is well known that buildings consume approximate 40% of total primary energy in the U.S. and electricity takes up more than 70% of this primary energy [99]. Both electricity suppliers and customers are facing the challenges with high energy consumption and peak demand in financial and capacity. Numerous existing studies have been published to reduce energy consumption and cost. In this section, research in saving energy and cost will be discussed and reviewed, focusing their control and operation methods.

4.2.1. Passive technologies

Using thermal storage in building thermal mass to pre-cool or pre-heat the building has been recognized as an effective passive technology to shift energy demand for decades. There are a lot of simulation and experiment studies on this topic, by controlling the HVAC systems' temperature setpoints at occupied and unoccupied periods [28,100–104]. In [28,101], optimal control models were developed to utilize low nighttime electrical rates, offset mechanical cooling with "free" cooling at night, and reduce peak electrical demands and cost. In [100], results from simulations, controlled laboratory testing, and field studies were analyzed and compared. This paper showed significant energy cost saving potential for use of building thermal mass energy storage in commercial buildings (Table 2).

Lee and Braun [103] presented semi-analytical (SA), exponential setpoint equation-based semi-analytical (ESA), and load weighted-averaging (WA) methods for determining zone temperature setpoints to limit peak demand. Energy savings, however, are sensitive to utility rates, occupancy schedules, building constructions, climate conditions. In order to evaluate the impacts of these key parameters on the effectiveness of pre-cooling for reducing energy costs, a series of parametric analyses were performed in Ref. [105]. This study found that 4–8 h pre-cooling periods were most effective at reducing peak cooling loads. Medium mass buildings were easy to have the best cost-saving performance. Cases with shorter peak periods offered the best potential for cost savings, and higher on-peak to off-peak energy charge ratio, as well as larger on-peak to off-peak demand charges ratio achieved higher savings potential. On the other hand, building temperature model predictive control method has caught more and more attention in recent years due to the calculation speed and accuracy increases of building energy models. In a very recent study published by Avci et al. [106], a model predictive control strategy for HVAC system under dynamic real-time day-ahead electricity pricing was proposed and validated. A state-space model was developed to model the impact of inputs (outside temperature, HVAC operation, etc.) on the output (inside building temperature) at each control interval. System identification Toolbox, N4SID, in MATLAB was used to determine the parameters in the state-space model. This prediction model is integrated into a MPC controller, which is then used to generate control signals for the air conditioning system in a 2000 square feet house in Florida, USA. Based on a real pricing plan provided in this study, around 8% reduction in overall energy consumption and 13% cost savings, and especially 23.6% and 24% reduction in peak energy consumption and cost respectively were achieved by this MPC controller.

Advanced model based and data based control methods for building energy passive techniques started to emerge in the past ten years. Henze et al. [107] presented an optimal passive thermal mass control simulation and optimization environment to reduce the energy consumption and peak demand. In this environment, a component based dynamic building energy simulation program was coupled to an optimization model in Matlab for energy and demand cost minimization. In order to make this optimal control method easy to be implemented, Henze et al. [108] then studied a set of near-optimal control strategies for building thermal mass. After analyzing the important parameters influencing the passive thermal storage effect for a range of buildings, weather conditions, and utility price rate combinations, the authors proposed the guidelines for the application of building thermal mass control strategies. Yin et al. [109] introduce how to optimize pre-cooling strategies using *Demand Response Quick Assessment* Tool (DRQAT). This paper outlined the procedure used to develop and calibrate DRQAT simulation models, and applied this procedure to eleven field test buildings. After calibrating the simulation models based upon field test results, the models could achieve $\pm 10\%$ accuracy prediction results. The field test results indicated that the pre-cooling strategies were able to reduce the peak demand as expected on Auto-DR event days in California, which reduced peak demand by 15% to 30%. Reinforcement learning, as a model free method, was also applied in optimal control of building thermal mass [110–112]. Although in these studies the reinforcement learning method successfully simulated building energy consumption with thermal mass storage, it needs large amounts of on-site measurement data from specific building. Above all, passive energy saving technologies have their own limitations and they are also dependent on the weather conditions, and building types. Now a lot of researchers have started to study the active technologies, such as power generation and storage systems.

Table 2
Cooling energy costs and savings of different control strategies for Chicago filed site [100].

Strategy	Energy costs ($)	Demand costs ($)	Total costs ($)	Savings (%)
Baseline	90,802	189,034	279,836	0
Light precool	84,346	147,581	231,927	17.1
Moderate precool	83,541	143,859	227,400	18.7
Extended precool	81,715	134,551	216,266	22.7
Maximum discharge	72,638	91,282	163,920	41.4
Slow linear rise	77,095	141,124	218,219	22

4.2.2. Active technologies

PV panel energy generation and ice tank energy storage provide more opportunities to dispatch building energy peak demand and reduce energy cost than thermal mass energy storage. Traditionally, the control scheme for PV systems is "PV Priority" control scheme. In this control scheme, the electricity generated from PV panel will power the load and then the excess power, if any, will charge the battery. The PV priority control is very simple and easy to implement, but it is not optimal. Hence, a lot of complex control strategies have been proposed and tested in this decade. The basic logic is to express the desired system behavior in an objective cost function, and then optimize this cost function over a time horizon using some optimization method [51]. In this study, an adaptive optimal control scheme was developed and tested for a grid-independent photovoltaic system using Q-learning algorithm, with a cost function placing more weight on meeting a critical base load than on those non-critical loads exceeding the base load. Nevertheless, Q-learning algorithm, as a model-free learning method, requires much on-site data in order to form solid estimates of its parameters. Chuku et al. [113] designed and implemented an optimal control algorithm for stand-alone PV panel based on fuzzy logic to achieve high efficiency in the utilization of the photovoltaic generated energy

for the building. Welch et al. [114] developed and compared two different optimal control strategies for stand-alone PV panel. The first strategy is based on Action Dependent Heuristic Dynamic Programming (ADHDP), a model-free adaptive control technique. The other one is based on a fuzzy logic control scheme using particle swarm optimization. The results of this study showed that the ADHDP base controller performed better than the fuzzy controller. Both of these two control strategies perform better than the standard PV priority control, with respect to load satisfaction rate and average state of charge. The electricity from grid connected PV panel (Fig. 12) not only can be used to power the load and charge the battery, but also it can be sold back to the grid [149].

Similar to the control of PV panel power generation, optimal control of TES has been investigated in a lot of studies [62,115–118]. The theoretical potential of ice storage systems in reducing energy cost was analyzed by Henze et al. [63]. Henze further developed a model predictive optimal control scheme for active thermal storage in Ref. [119]. In this study, a utility rate module, two thermal energy storage models were developed and combined with a dynamic building model in EnergyPlus. A cost optimization approach to minimize total utility bill either with or without demand charges based on a time-of-use electricity rate, using direct search, gradient-based methods, and dynamic programming method, was incorporated into the simulation model. 17% to 27% cost saving was achieved in a small commercial building in Iowa, comparing to the reference control schemes. Hajiah and krarti [65,66] compared conventional controls without load shifting, pre-cooling of building thermal mass, chiller-priority control strategy of ice tank storage system, storage-priority control strategy, and an optimal control strategy to investigate the potential of using simultaneously building thermal mass and ice storage system. Three different cost functions were modeled individually in the optimal control strategy to minimize energy costs only, minimize demand cost only and minimize total costs. Vetterli and Benz investigated an optimal ice storage cooling system under various electricity tariff schemes in Ref. [120]. Mixed integer linear programming method was implemented to linearize and solve the linear optimization problem of the building energy model, ice storage system model and dedicated vapor compression chiller model. Approximately 8% cost reduction was achieved from this optimal design and control of ice tank storage system in a cast study in this paper. A near optimal control strategy for ice storage systems with dynamic electricity rates was developed by Braun [121]. In this study, the ice tank storage was modeled with a semi-empirical model, and the dedicated ice-making chiller was modeled with a purely empirical model. Different combinations of cooling plants, storages sizes, buildings, locations, and electricity price rates were simulated to evaluate the proposed storage control strategy. This near-optimal control scheme requires relatively low-cost measurements, little specific plant information, and is less computational than the optimal control algorithms discussed above. However, the savings from this simplified control method is remarkably close to that from the optimal control method.

In order to capture the uncertainty of weather and building load prediction, several predictive optimal control models subject to uncertain weather and load information were developed and applied in these two decades. Henze et al. [102] investigated various TES predictor models with respect to their performance in load and weather forecasting. Perfect prediction, a bin model, a random walk model, a harmonic model, and an autoregressive neural network model for forecasting have been analyzed and compared. They pointed out the cost saving results from the complex network model and the simple bin models were close to that of a perfect prediction model. What's more, they also investigated the uncertainty of imperfect modeling in this paper. The effect of weather and load forecasting uncertainty on predictive TES optimal control was studied by Henze and Krarti [94]. Liu and Henze [111,112] further used a hybrid control scheme combining the features of model based optimal control and model free learning control to investigate a novel control the operation method for ice storage system. As shown in Fig. 13, the control single output is calculated in two steps: a simulated learning phase and an implemented learning phase, rather than directly calculated from environment inputs. Hence, the optimal controller can eliminate the effect of weather and load forecasting uncertainty. In this study a full-scale laboratory experiment was conducted to evaluate the performance of the combined model-based and model-free learning control strategy. The experimental results showed, however, that the savings under this hybrid control approach were lower than that under the model-based predictive optimal control scheme introduced in Ref. [119].

4.3. Multi-building optimal control for demand response

In the previous sections, studies for single building optimal control were discussed. Nowadays, smart grid infrastructure has increased transparency and consumer awareness of electricity consumption. A lot of researchers started to use load management for a group of buildings, where buildings can share electricity to shift the load and save energy cost.

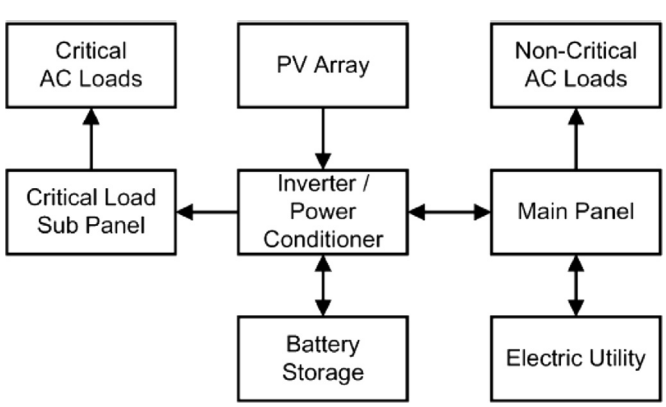

Fig. 12. Grid-connected PV system with battery storage.

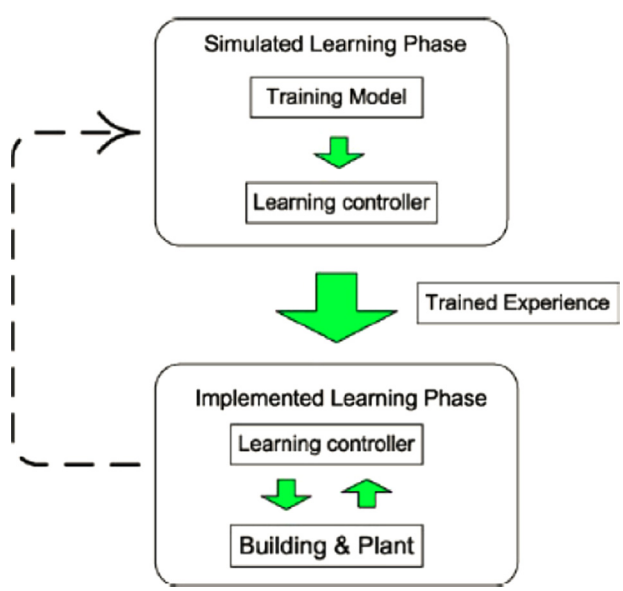

Fig. 13. Hybrid control scheme.

Electricity load aggregation showed a great potential to shave peak demand and reduce energy cost. Recent studies have demonstrated various benefits of interconnecting of multiple buildings with different on-site renewable energy generation [122]. Reddy et al. [123] reported the results of several load aggregation case studies on real fields and simulations. They discovered that aggregation of multiple buildings under active load control can result in a 6% demand cost reduction in simulation and 4.8% demand cost savings in real fields. Reddy and Norford [124,125] further proposed 11 tools for aggregators and their customers to manage building load. These 11 tools can be used to assemble a portfolio of customers suitable for proactive aggregation and develop the optimal operation strategies for building load aggregation. Perfumo et al. [126] modeled the control of aggregated power demand of a population of HVAC systems by describing how the proportion of operating HVAC system varies over time, following a step change in the temperature set point of all HVAC systems. However, the current research on load aggregation only focuses on the whole building level without considering the building equipment, especially on-site energy generation and energy storage, in detail. On the other hand, the detailed building energy model has focused on developing an accurate simulation model for a single building, which limits its application to study the energy sharing between multiple buildings.

Different from traditional load management studies, Hu et al. [127] developed a simulation testbed for energy consumption of a group of buildings (building cluster). A decision model based on a building cluster simulator with each building modeled with building energy consumption, on-site generation, electrical energy storage and thermal energy storage sub modules (Fig. 14). A bi-level operation optimization and decision framework based on a memetic algorithm was proposed in this study to analyze the tradeoff in energy usage among the group of buildings to minimize the energy cost of each building under different electricity dynamic pricing rate. This study combined detailed building energy model with building load aggregation to study the potential of energy cost saving for a group of buildings instead of a single building. All those sub modules as well as the optimization and decision models were modeled with simplified empirical or semi-empirical equations in Matlab. Hence detailed building energy and building component model, such as the white box model discussed in Section 2.1, can be used to improve the accuracy of this simulation. Anandalaskhmi et al. [128] presented a peak demand management techniques for a smart community using different coordination mechanism based on multiple building agent models. Centralized model, decentralized model and Pareto resource allocation model were used and compared for resource allocation.

5. Agent based building energy modeling

It has been proven that the agent based technology is an effective method to simulate and control complex systems in manufacturing [129], power distribution [130], and electricity pricing [131]. An agent based model consists of multiple agents, and each agent represents a critical component of the system. Although different agents have different functions, they share some common characteristics. They are also able to communicate with each other and affect each other.

As shown in [127], an agent based building energy system model was developed, consisting of a PV panel agent, a battery agent, an ice tank thermal storage agent, a power grid agent, two building agents, and a control agent. The PV panel model is from [46], battery model is from [57], ice tank model is from [60], and building is simulated by 3R2C model. They all have been discussed in Section 3. Those agents were interconnected and controlled by the control agent. For example, the PV panel agent can charge the battery agent or power the building agents, and on the hand battery agent can also affect the behavior of the PV panel agent, such as PV panel cannot charge the battery when it is full of charge. The control agent determines the optimal operation strategies for each agent.

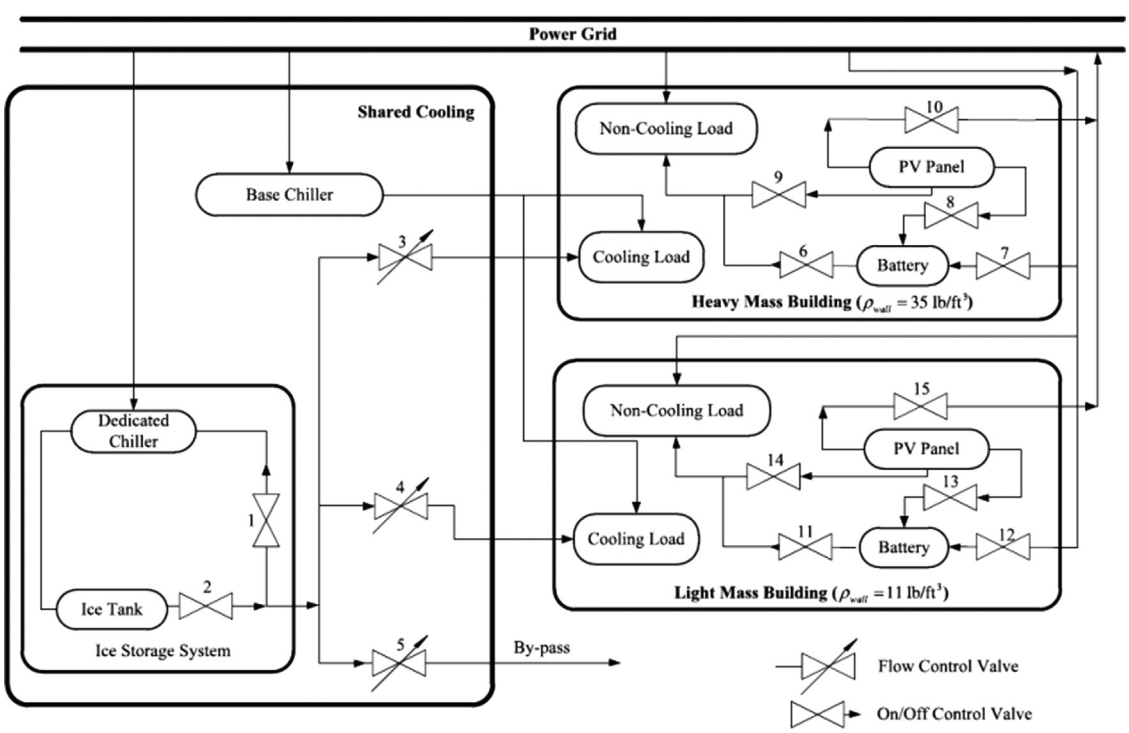

Fig. 14. Overall schematic of the integrated building cluster energy system.

Agent based approach have also been utilized to analyze the relationship between building energy consumption and occupant behavior [132–134]. These studies estimated the building energy consumption based on the behaviors of occupant agents, and equipment agents. Empirical survey (questionnaire and observation) is often carried out to identify and analyze the occupants' behavior patterns. Other equipment, such as lighting system, HVAC system and electrical devices, are often modeled as passive agents affected by occupant agents, as shown in Fig. 15. In [134], the primary power agents for PV panel and wind turbines, backup power agents for power grids, and energy storage agents for batteries were developed and interconnected as a multi-agent based building operation tested bed. An operation optimization agent was also created to determine the operation of each agent in this test bed. PSO optimizer was utilized to determine the operation strategy for each agent based on its operation data. The overall schematic of the building simulation and control system is shown in Fig. 16.

Mo and Mahdavi [135] developed an agent based bi-lateral framework for building operators and individual occupants to negotiate their control activities. The agent-based simulation environment was built on RESTINA Agent Foundation Class, which was developed by Intelligent Software Agents Laboratory at Carnegie Mellon University. Operator agent, occupant agents, illuminance agents and louver actuator agents, and etc. were developed and interconnected. Building operator agent and occupant agent both can control the occupant's local environmental settings, e.g., lighting, heating, cooling, and ventilation. While personal controls may enhance individual comfort, they may also neutralize operators' cost-saving efforts. This conflict has been addressed in this bi-lateral optimization framework. A negotiator agent was then created to analyze the information for all the other agents and make operation decisions for each agent based on the optimization results. Agent based model was also used in [136] to develop an intelligent supervisor controller, which coordinates the optimal cooperation of the local control agents (Fig. 17). GA optimizer was used to optimize the local controller operation off-line in the intelligent coordinator agent based on the information for all the local controllers, weather information and some other user disturbance. Jia et al. [137] proposed a multi-agent system to model the distributed and hierarchical characteristics of the system structure and the interactive relations between system operators and consumers in smart grid. Interactive response mechanism was proposed to analyze the power system dispatch capability. This interactive response mechanism consists of data clustering and release scheme, demand-side interactive response capability submission scheme, and submission correction scheme. Another agent-based Electricity Market Complex Adaptive System (EMCAS) model was developed by Valenzuela et al. [138] to simulate the response of consumers to dynamic pricing. On this basis, they explored the impacts of real-time pricing on load-shifting demand response, consumer energy bills, power supplier profits, and congestion costs. A simulation experiment consisting of 11 buses, 8 power generation companies, and 5 aggregated consumers was conducted to test the effectiveness of this model. Jiang developed an agent based framework for distributed energy control framework in Ref. [139]. In this framework, energy resource and load, such as energy source unit, energy storage unit, load unit, were modeled as autonomous agents. Different

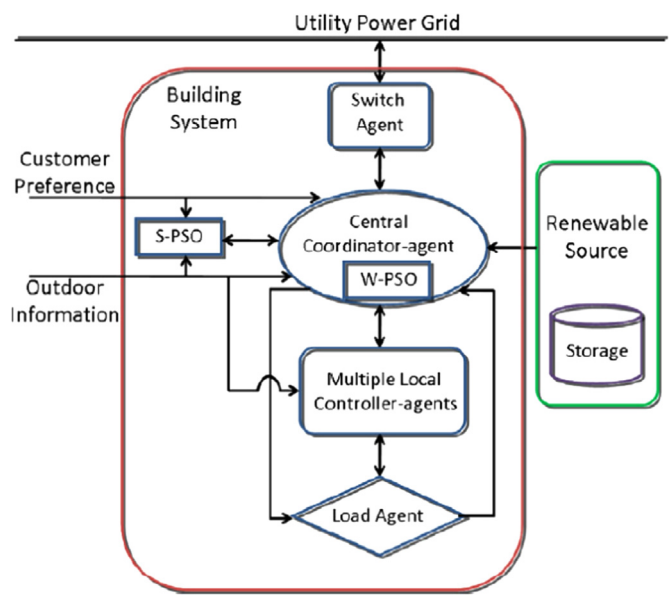

Fig. 16. Overall design of the proposed building control system.

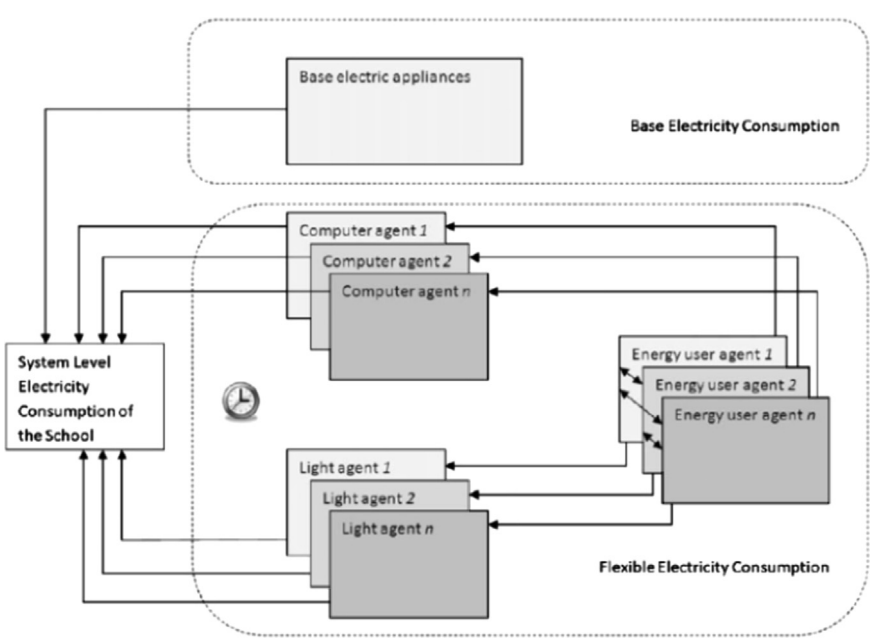

Fig. 15. Overview of the agent connection.

simulation studies under different situations have been conducted in a distributed energy system to demonstrate the effectiveness of this proposed agent based framework. The simulation results showed that this control framework can manage the power of each energy source properly and the micro-grid works reliably.

6. System identification for building energy modeling

System identification is the process of developing or improving a mathematical representation of a physical system using experimental data [140]. System identification techniques have started being applied in building energy modeling area to obtain a better simulation estimation of building performance. In this section, the research efforts on system identification method implementation in building modeling for building operation will be discussed.

Privara et al. [141] proposed an approach combining the EnergyPlus model and a subspace system identification model to forecast building performance. Since building regular operation data range is relative narrow and it lacks of high frequency information, a MATLAB-BCVTB-EnergyPlus testbed (Fig. 18) was developed for building excitation, system identification and building performance forecasting. Pseudo-random binary signals, sum of sinusoid signals and multilevel pseudo-random signals were used to excite the building system by updating temperature setpoints to get good quality building operation data for model training. Then a subspace model in MATLAB N4SID toolbox was utilized for system identification and operation forecasting. This same building system exciting method was also applied in another publication [142]. Similar to all the system identification studies, besides the model structure selection, the system order and the Hankel matrix size are important factors for model accuracy and calculation speed. In this study, parametric testing studies were conducted to determine these two factors. From their testing and validating results, 18th order subspace model turned out to be the best choice, considering both its simplicity and sufficient precision.

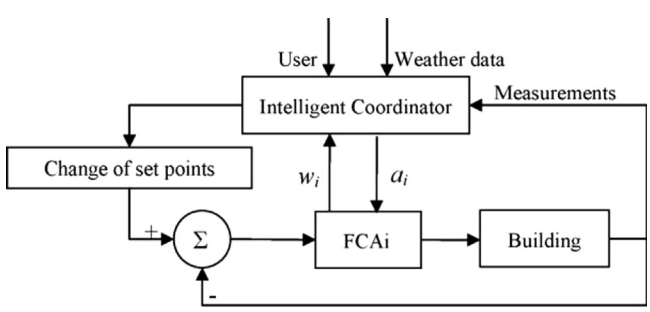

Fig. 17. Agent based intelligent controller configuration.

Considering the system order and richness input signal data, finally 40 was selected for the size of Hankel matrices for one subsystem. Although parametric testing methods were useful to determine the system order and Hankel matrix rank, systematic approach for model structure selection, order determination still have not provided. Most of the existing studies just tried the trial-and error method to determined model structure and order.

Jiménez et al. [143] presented an overview of the models that can be applied for modeling building thermal characteristic and building energy components using system identification approach. Nonlinear regression model, impulse response function and state space form model were applied and compared. It was argued that the continuous–discrete time stochastic state space model provided a strong framework for modeling building energy systems. Multi-step ahead identification with least square method were developed for building energy modeling in Ref. [144]. Singular value decomposition (SVD) decomposition was used to determine the order of the multiple-Input Multiple-Output building heating energy prediction system. The inputs and outputs of this prediction system model are summered in Eqs. (42) and (43):

$$u = [T_o \;\; T_{HWS} \;\; T_{HWN}]^T \tag{42}$$

$$y = [T_{RS} \;\; T_{RWS} \; T_{RN} \; T_{RWN}]^T \tag{43}$$

where T_o is the forecasted outside temperature, T_{HWS} is the temperature of heating water to south zone, T_{HWN} is the temperature of heating water to north zone, T_{RS} is the south room temperature, T_{RWS} is the temperature of returning heating water from south zone, T_{RN} is the north room temperature, and T_{RWN} is the temperature of returning heating water from north zone. A case study was presented using this prediction system. 600 data points representing 7 days from Jan. 3rd to Jan 10th 2011 were used to train the system. Based on the training data and SVD results, the system was chose to be a 5th order model. A MPC model was then developed based on this prediction system in control of building temperature setpoints.

It is common knowledge that system excitation signal is crucial to system identification models' accuracy and robustness. Different system excitation strategies, such as Pseudo-Random Binary signal, Pseudo-Radom Sequences, Multi-sine signal, have been discussed and applied in [145–147] on-linear process systems in Mechanical and Chemical process. Excitation signals' constraints and guidelines to ensure the signals contain enough frequency information to meet the identification requirements have been established and tested. For example, a Multi-sine signal, as shown in Eq. (44), was designed and applied in Ref. [146]. Where λ is the scaling factor, T is the sampling time, n_s is the number of harmonics to reside within the frequency limits, and ϕ_i is the phases lag. The frequency ω is constrained by Eq. (45). Where τ^H_{dom}

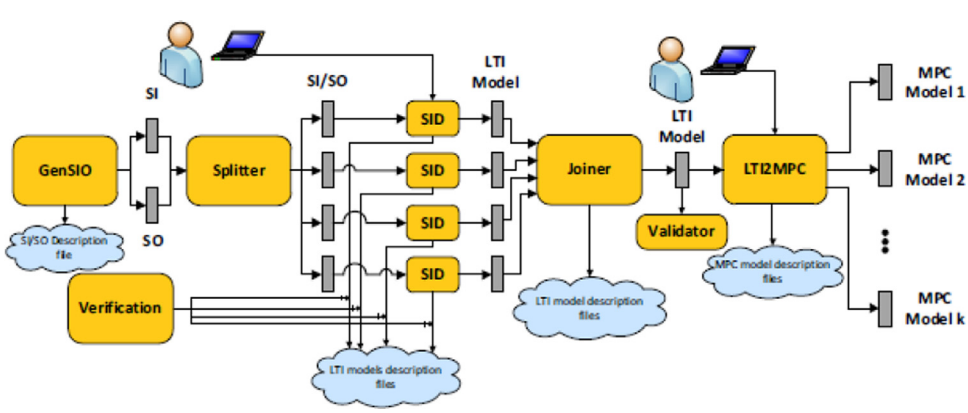

Fig. 18. System identification procedure.

and τ^L_{dom} correspond to the high and low estimates of the dominant time constant of the system. α_s and β_s are user-decisions on high and low frequency content based on identification requirement. This excitation signal generation method has been used in Ref. [141].

$$u_s(k) = \lambda \sum_{i=1}^{n_s} \sqrt{2\alpha_i}\, cos(\omega_i kT + \phi_i) \tag{44}$$

$$\frac{1}{\beta_s \tau^H_{\text{dom}}} \le \omega \le \frac{\alpha_s}{\tau^L_{\text{dom}}} \tag{45}$$

Another Pseudo-random Binary Sequence (PRBS) excitation signal (Eq. (46)) for building temperature setpoints was generated and applied in a building energy modeling study discussed previously [15].

$$T_{sp,i}(k) \begin{cases} 21, \text{ excited zone, } \text{PRBS} = 0 \\ 25, \text{ excited zone, } \text{PRBS} = 1 \\ 25, \quad \text{nonexcited zones} \end{cases} \tag{46}$$

System identifiability is another very important factor to system identification accuracy and efficiency. It is affected by the input data, excitation signals and system model structure. A effective theoretical study about system structure and local identifiability based on excitation signal inputs and system measurements has been published in Ref. [148]. This study presented a building data dependent identification algorithm to calculate the numerical identifiability for high order RC model, by checking the rank of its Hankel matrix. This algorithm is a closed-loop "active identification" structure which can be used to improve the experimental design for batter training data quality. Multi-sinusoidal and random Gaussian excitation inputs were injected into the model as excitation signals to identify those resistances and capacitances based on building operation measurements and excitation signals.

Although plenty of existing studies applied system identification approach to model and forecast building energy performance, there is still a lack of systematic analysis about the system structure selection, system order determination and the relationship between excitation data quality and system identifiability and efficiency. How to generation appropriate excitation signals, training data, and determine model structure, order with considering the characteristics of building energy systems is an urgent research topic for system identification in building energy modeling

7. Conclusion

This paper reviewed the recent efforts on building energy modeling, including whole building modeling and building critical component modeling, for building control and operation. Different modeling approaches, from white box models to black box models, were discussed and compared. Methods for short-term weather forecasting for building energy modeling were also introduced. Two novel modeling methods: agent-based model and system identification, and their application in building energy performance forecasting were also reviewed. Different model-based optimal control methods for building thermal mass, on-site energy generation and storage to reduce building energy cost were reviewed and discussed. Based on the discussions of different modeling approaches in building operation and optimization a few conclusions are summarized as follows:

1. Detailed physical (white-box) models might not be suitable for on-line building operation, even though they can provide good estimation accuracy, because they require thousands of parameters and high number of iterations. However, these models are useful and informative for operation strategy assessment and building operation data providing;
2. Statistics (black-box) models' calculation speed can be fast enough for on-line building operation; however, they need large number training data, and the training data should cover the forecasting building operation range, which is bounded by the building operation schemes. Fortunately, those operation data can be provided by detailed physical models;
3. Simplified physical (gray-box) models are better for practical building model based operation application. They have less parameters to determine and need shorter computation time, which has huge potential in building energy model for energy and cost saving;
4. Energy generation and storage modeling and forecasting is essential to model based optimal control for building energy demand response and peak demand shaving;
5. Agent based models provide a new modeling approach for the building energy system study. They allow detailed models in each agent model and interconnect different agent, which can apply different operation strategies easily. Especially, agent based models can be used for multiple buildings' modeling and operation studies;
6. System identification has been applied in building energy model, which studies building from a system point of view, starting from model structure, model order to parameter identification. It can achieve high accuracy and save calculation time. However, there are no systematic guidelines about identification model structure selection, model order determination, and system excitation signal generation for building energy systems.

A great progress has been made in applying building energy model for building control and operation to save energy or cost. However, there is still a long way to go to make these methods applicable and guarantee the desirable performance in practice. Reducing the computational cost and memory demand for building energy modeling and optimal control, while maintaining the accuracy, is the urgent issues for on-line practical application.

Acknowledgement

Financial support provided by the U.S. National Science Foundation Award no. 1239247 is greatly appreciated.

References

[1] Parks N. Energy efficiency and the smart grid. Environ Sci Technol 2009;43(9):2999–3000.
[2] Friedman H. Wiring the smart grid for energy savings: integrating buildings to maximize investment. Portland, Oregon: Portland Energy Conservation Inc. (PECI.); 2009.
[3] DOE, U.S. buildings energy data book, ⟨http://buildingsdatabook.eren.doe.gov/⟩. 2011 [cited 2013 07.01].
[4] Katipamula S, Brambley MR. Review article: methods for fault detection, diagnostics, and prognostics for building systems—a Review, Part I. HVAC&R Res 2005;11(1):3–25.
[5] National Energy Technology Laboratory (NETL), demand dispatch–intelligent demand for a more efficient grid, DOE/NETL-DE-FE0004001, editor. August 2011: Morgantown, West Virginia.
[6] Wang S, Yan C, Xiao F. Quantitative energy performance assessment methods for existing buildings. Energy Build 2012;55(0):873–88.
[7] Office of energy efficiency and renewable energy [Internet]. U.S. Department of Energy (Washington, D.C. EnergyPlus Energy Simulation Software: About EnergyPlus. [cited 2014 March 03]; Available from: ⟨http://www.energyplus.gov⟩.
[8] ESP-r. University of Strathclyde. Available from: ⟨http://www.esru.strath.ac.uk/ProgramsESP-r.htm⟩.
[9] TRNSYS. Thermal energy system specialists. Available from: ⟨http://www.trnsys.com⟩.

[10] Crawley DB, et al. Contrasting the capabilities of building energy performance simulation programs. Build Environ 2008;43(4):661–73.
[11] U.S. Department of Energy, E.E.a.R.E.O., Building Technology Program, Net-Zero Energy Commercial Building Initiative. Commercial Building Benchmark Models. Available from: 〈http://www1.eere.energy.gov/buildings/commercial_initiative/benchmark models.html〉. 2009.
[12] May-Ostendorp P, et al. Model-predictive control of mixed-mode buildings with rule extraction. Build Environ 2011;46(2):428–37.
[13] Corbin CD, Henze GP, May-Ostendorp P. A model predictive control optimization environment for real-time commercial building application. J Build Perform Simul 2013;6:3.
[14] Wetter, M, Haves, P., A modular building controls virtual test bed for the integration of heterogeneous systems. In: Proceedings of third nation conference of IBPSA-USA SimBuild. : Berkeley, California; 2008.
[15] Ma J, et al. Demand reduction in building energy systems based on economic model predictive control. Chem Eng Sci 2012;67(1):92–100.
[16] Wetter M. Design optimization with GenOptR, in building energy simulation Sept./Oct. Lawrence Berkeley National Laboratory; 2000.
[17] Coffey B, et al. A software framework for model predictive control with GenOpt. Energy Build 2010;42(7):1084–92.
[18] Pang X, et al. A framework for simulation-based real-time whole building performance assessment. Build Environ 2012;54:100–8.
[19] Cole, WJ, Hale, ET, Edgar, TF. Building energy model reduction for model predictive control using OpenStudio. In: 2013 American control conference. Washington, DC; 2013.
[20] Yun K, et al. Building hourly thermal load prediction using an indexed ARX model. Energy Build 2012;54(0):225–33.
[21] Moroşan P-D, et al. Building temperature regulation using a distributed model predictive control. Energy Build 2010;42(9):1445–52.
[22] Eisenhower B, et al. A methodology for meta-model based optimization in building energy models. Energy Build 2012;47:292–301.
[23] Moon JW, Kim J-J. ANN-based thermal control models for residential buildings. Build Environ 2010;45(7):1612–25.
[24] Yokoyama R, Wakui T, Satake R. Prediction of energy demands using neural network with model identification by global optimization. Energy Convers Manage 2009;50(2):319–27.
[25] Hou Z, et al. Cooling-load prediction by the combination of rough set theory and an artificial neural-network based on data-fusion technique. Appl Energy 2006;83(9):1033–46.
[26] Yang J, Rivard H, Zmeureanu R. On-line building energy prediction using adaptive artificial neural networks. Energy Build 2005;37(12):1250–9.
[27] Braun JE, Chaturvedi N. An inverse gray-box model for transient building load prediction. HVAC&R Res 2002;8(1):73–99.
[28] Braun JE. Reducing energy costs and peak electrical demand through optimal control of building thermal storage. ASHRAE Trans 1990;96(2):876–88.
[29] Lee K-h, Braun JE. Model-based demand-limiting control of building thermal mass. Build Environ 2008;43(10):1633–46.
[30] Wang S, Xu X. Simplified building model for transient thermal performance estimation using GA-based parameter identification. Int J Therm Sci 2006;45(4):419–32.
[31] Zhou Q, et al. A grey-box model of next-day building thermal load prediction for energy-efficient control. Int J Energy Res 2008;32(15):1418–31.
[32] Široký J, et al. Experimental analysis of model predictive control for an energy efficient building heating system. Appl Energy 2011;88(9):3079–87.
[33] Ma Y, et al. Model predictive control for the operation of building cooling systems. IEEE Trans Control Syst Technol 2012;20(3):796–803.
[34] Lee, K.-h., J.E. Braun. Reducing peak cooling loads through model-based control of zone temperature setpoints. In: American control conference, 2007. ACC'07. IEEE; 2007.
[35] Wei Zhang, et al. Aggregated modeling and control of air conditioning loads for demand response. IEEE Trans Power Syst 2013:99).
[36] Sourbron M, Verhelst C, Helsen L. Building models for model predictive control of office buildings with concrete core activation. J Build Perform Simul 2013;6(3):175–98.
[37] Hazyuk I, Ghiaus C, Penhouet D. Optimal temperature control of intermittently heated buildings using model predictive control: Part I—Building modeling. Build Environ 2012;51(0):379–87.
[38] Oldewurtel F, et al. Use of model predictive control and weather forecasts for energy efficient building climate control. Energy Build 2012;45(1):15–27.
[39] O'Neill Z, Narayanan S, Brahme R. Model-based thermal load estimation in buildings. Proc SimBuild 2010.
[40] Fux SF, et al. EKF based self-adaptive thermal model for a passive house. Energy Build 2014;68(Part C):811–7.
[41] Ma, J, Qin, SJ, Salsbury., T. Model predictive control of building energy systems with balanced model reduction. In: American control conference (ACC), 2012. . IEEE; 2012.
[42] Candanedo JA, Dehkordi VR, Stylianou M. Model-based predictive control of an ice storage device in a building cooling system. Appl Energy 2013;111(0):1032–45.
[43] Prívara S, et al. Building modeling: selection of the most appropriate model for predictive control. Energy Build 2012.
[44] King D, Boyson W, Kratochvill J. Photovoltaic array performance model. Sandia National Laboratories; 2004.
[45] Davis MW, Fanney AH, Dougherty BP. Measured versus predicted performance of building integrated photovoltaics. Trans Am Soc Mech Eng J Sol Energy Eng 2003;125(1):21–7.
[46] Lu L, Yang H. A study on simulations of the power output and practical models for building integrated photovoltaic systems. J Sol Energy Eng 2004;126(3):929–35.
[47] Jones A, Underwood C. A thermal model for photovoltaic systems. Sol Energy 2001;70(4):349–59.
[48] Mellit A, Benghanem M, Kalogirou SA. Modeling and simulation of a stand-alone photovoltaic system using an adaptive artificial neural network: Proposition for a new sizing procedure. Renewable Energy 2007;32(2):285–313.
[49] Kim S-K, et al. Modeling and simulation of a grid-connected PV generation system for electromagnetic transient analysis. Sol Energy 2009;83(5):664–78.
[50] Hernandez J, Gordillo G, Vallejo W. Predicting the behavior of a grid-connected photovoltaic system from measurements of solar radiation and ambient temperature. Appl Energy 2013;104(0):527–37.
[51] Henze GP, Dodier RH. Adaptive optimal control of a grid-independent photovoltaic system. J Sol Energy Eng 2003;125(1):34–42.
[52] Sukamongkol Y, Chungpaibulpatana S, Ongsakul W. A simulation model for predicting the performance of a solar photovoltaic system with alternating current loads. Renewable Energy 2002;27(2):237–58.
[53] Hoff TE, Perez R, Margolis RM. Maximizing the value of customer-sited PV systems using storage and controls. Sol Energy 2007;81(7):940–5.
[54] Nair N-KC, Garimella N. Battery energy storage systems: assessment for small-scale renewable energy integration. Energy Build 2010;42(11):2124–30.
[55] Leadbetter J, Swan L. Battery storage system for residential electricity peak demand shaving. Energy Build 2012;55(0):685–92.
[56] McKenna E, et al. Economic and environmental impact of lead-acid batteries in grid-connected domestic PV systems. Appl Energy 2013;104:239–49.
[57] Lu, L., Investigation on characteristics and application of hybrid solar-wind power generation systems. PhD dissertation. Hong Kong: Hong Kong Polytechnic University; 2004.
[58] Lijun G, Liu S, Dougal RA. Dynamic lithium-ion battery model for system simulation. IEEE Trans Compon Packag Technol 2002;25(3):495–505.
[59] Darcovich K, et al. Higher-capacity lithium ion battery chemistries for improved residential energy storage with micro-cogeneration. Appl Energy 2013;111(0):853–61.
[60] West JD, Braun JE. Modeling partial charging and discharging of area-constrained ice storage tanks. HVAC&R Res 1999;5:20.
[61] Ihm P, Krarti M, Henze GP. Development of a thermal energy storage model for EnergyPlus. Energy Build 2004;36(8):807–14.
[62] Sehar F, Rahman S, Pipattanasomporn M. Impacts of ice storage on electrical energy consumptions in office buildings. Energy Build 2012;51(0):255–62.
[63] Henze GP, Krarti M, Brandemuehl MJ. A simulation environment for the analysis of ice storage controls. HVAC&R Res 1997;3(2):128–48.
[64] Henze GP, Krarti M, Brandemuehl MJ. Guidelines for improved performance of ice storage systems. Energy Build 2003;35(2):111–27.
[65] Hajiah, A, Krarti, M., Optimal control of building storage systems using both ice storage and thermal mass—Part I: Simulation environment. Energy Convers Manage, 2012.
[66] Hajiah A, Krarti M. Optimal controls of building storage systems using both ice storage and thermal mass—Part II: Parametric analysis. Energy Convers Manage 2012.
[67] Henze GP, Felsmann C, Knabe G. Evaluation of optimal control for active and passive building thermal storage. Int J Therm Sci 2004;43(2):173–83.
[68] Chen HJ, Wang DWP, Chen SL. Optimization of an ice-storage air conditioning system using dynamic programming method. Appl Therm Eng 2005;25(2):461–72.
[69] Massie DD. Optimization of a building's cooling plant for operating cost and energy use. Int J Therm Sci 2002;41(12):1121–9.
[70] Martín L, et al. Prediction of global solar irradiance based on time series analysis: application to solar thermal power plants energy production planning. Sol Energy 2010;84(10):1772–81.
[71] Yoshida, H., et al., Modeling of weather data by time series analysis for air-conditioning load calculations 1992. American Society of Heating, Refrigerating and Air-conditioning Engineers.
[72] Reikard G. Predicting solar radiation at high resolutions: a comparison of time series forecasts. Sol Energy 2009;83(3):342–9.
[73] Paoli C, et al. Forecasting of preprocessed daily solar radiation time series using neural networks. Sol Energy 2010;84(12):2146–60.
[74] Voyant C, et al. Optimization of an artificial neural network dedicated to the multivariate forecasting of daily global radiation. Energy 2011;36(1):348–59.
[75] Kaushika ND, Tomar RK, Kaushik SC. Artificial neural network model based on interrelationship of direct, diffuse and global solar radiations. Sol Energy 2014;103(0):327–42.
[76] Liu BYH, Jordan RC. The interrelationship and characteristic distribution of direct, diffuse and total solar radiation. Sol Energy 1960;4(3):1–19.
[77] Loutzenhiser P, et al. Empirical validation of models to compute solar irradiance on inclined surfaces for building energy simulation. Sol Energy 2007;81(2):254–67.
[78] Coskun C, Oktay Z, Dincer I. Estimation of monthly solar radiation distribution for solar energy system analysis. Energy 2011;36(2):1319–23.

[79] ASHRAE, ASHRAE fundamentals handbook. American Society of Heating, Refrigerating and Air Conditioning Engineers, Atlanta, 2001. p. 111.
[80] Ulgen K, Hepbasli A. Diffuse solar radiation estimation models for Turkey's big cities. Energy Convers Manage 2009;50(1):149–56.
[81] Yang D, et al. Solar irradiance forecasting using spatial-temporal covariance structures and time-forward kriging. Renewable Energy 2013;60(0):235–45.
[82] Boland J, Huang J, Ridley B. Decomposing global solar radiation into its direct and diffuse components. Renewable Sustainable Energy Rev 2013;28(0):749–56.
[83] Perez R, et al. A new operational model for satellite-derived irradiances: description and validation. Sol Energy 2002;73(5):307–17.
[84] Ridley B, Boland J, Lauret P. Modelling of diffuse solar fraction with multiple predictors. Renewable Energy 2010;35(2):478–83.
[85] Olmo FJ, et al. Prediction of global irradiance on inclined surfaces from horizontal global irradiance. Energy 1999;24(8):689–704.
[86] Redweik P, Catita C, Brito M. Solar energy potential on roofs and facades in an urban landscape. Sol Energy 2013;97(0):332–41.
[87] Bakirci K. Models of solar radiation with hours of bright sunshine: a review. Renewable Sustainable Energy Rev 2009;13(9):2580–8.
[88] Khalil SA, Shaffie AM. A comparative study of total, direct and diffuse solar irradiance by using different models on horizontal and inclined surfaces for Cairo, Egypt. Renewable Sustainable Energy Rev 2013;27:853–63.
[89] Badescu V. A new kind of cloudy sky model to compute instantaneous values of diffuse and global solar irradiance. Theor Appl Climatol 2002;72(1-2):127–36.
[90] Tian Y, et al. Estimating solar radiation on slopes of arbitrary aspect. Agric Forest Meteorol 2001;109(1):67–74.
[91] Skartveit A, Olseth J Asle. Modelling slope irradiance at high latitudes. Sol Energy 1986;36(4):333–44.
[92] Steven M, Unsworth MH. The angular distribution and interception of diffuse solar radiation below overcast skies. Q J R Meteorolog Soc 1980;106(447):57–61.
[93] Perez R, et al. Modeling daylight availability and irradiance components from direct and global irradiance. Sol Energy 1990;44(5):271–89.
[94] Henze GP, et al. Impact of forecasting accuracy on predictive optimal control of active and passive building thermal storage inventory. HVAC&R Res 2004;10(2):153–78.
[95] Florita AR, Henze GP. Comparison of short-term weather forecasting models for model predictive control. HVAC&R Res 2009;15(5):835–53.
[96] Dovrtel K, Medved S. Multi-objective optimization of a building free cooling system, based on weather prediction. Energy Build 2012.
[97] Dovrtel K, Medved S. Weather-predicted control of building free cooling system. Appl Energy 2011;88(9):3088–96.
[98] Ren MJ, Wright JA. Adaptive diurnal prediction of ambient dry-bulb temperature and solar radiation. HVAC&R Res 2002;8(4):383–401.
[99] Kelson JD. Buildings energy data book, March 2012. Energy Efficiency and Renewable Energy. U.S.Department of Energy; 2011.
[100] Braun JE. Load control using building thermal mass. J Sol Energy Eng Trans ASME 2003;125(3):292–301.
[101] Rabl A, Norford L. Peak load reduction by preconditioning buildings at night. Int J Energy Res 2007;15(9):781–98.
[102] Henze GP, Dodier RH, Krarti M. Development of a predictive optimal controller for thermal energy storage systems. HVAC&R Res 1997;3(3):233–64.
[103] Lee K-H, Braun JE. Evaluation of methods for determining demand-limiting setpoint trajectories in buildings using short-term measurements. Build Environ 2008;43(10):1769–83.
[104] Xu P. Case study of demand shifting with thermal mass in two large commercial buildings. ASHRAE Trans 2009;115(2):14.
[105] Morgan S, Krarti M. Impact of electricity rate structures on energy cost savings of pre-cooling controls for office buildings. Build Environ 2007;42(8):2810–8.
[106] Avci M, et al. Model predictive HVAC load control in buildings using real-time electricity pricing. Energy Build 2013;60(0):199–209.
[107] Henze GP, et al. Optimization of building thermal mass control in the presence of energy and demand charges. ASHRAE Trans 2008;114(2):75–84.
[108] Henze GP, et al. Advances in near-optimal control of passive building thermal storage. J Sol Energy Eng 2010;132:2.
[109] Yin R, et al. Study on Auto-DR and pre-cooling of commercial buildings with thermal mass in California. Energy Build 2010;42(7):967–75.
[110] Liu S, Henze GP. Evaluation of reinforcement learning for optimal control of building active and passive thermal storage inventory. J Sol Energy Eng 2007;129(2):215–25.
[111] Liu S, Henze GP. Experimental analysis of simulated reinforcement learning control for active and passive building thermal storage inventory: Part 2: Results and analysis. Energy Build 2006;38(2):148–61.
[112] Liu S, Henze GP. Experimental analysis of simulated reinforcement learning control for active and passive building thermal storage inventory: Part 1. Theoretical foundation. Energy Build 2006;38(2):142–7.
[113] Chuku, AU., et al., Making solar energy a viable stand-alone alternative through energy efficient control algorithm. In: International conference on Power Systems Operation and Planning—VI (ICPSOP); 2005. p. 71–79.
[114] Welch, R, Venayagamoorthy, G. Comparison of two optimal control strategies for a grid independent photovoltaic system. In: Industry applications conference, 2006. 41st IAS annual meeting. Conference record of the 2006 IEEE. IEEE; 2006.
[115] Sehar F. Impact of ice storage on electrical energy consumption in large and medium-sized office buildings in different climate zones. Virginia Polytechnic Institute and State University; 2011.
[116] Farahani, M, Saeidi, N. Case study of design and implementation of a thermal energy storage system. In: Power and energy conference, 2006. PECon'06. IEEE International. IEEE; 2006.
[117] Henze GP. An overview of optimal control for central cooling plants with ice thermal energy storage. J Sol Energy Eng 2003;125(3):302–9.
[118] Yau Y, Rismanchi B. A review on cool thermal storage technologies and operating strategies. Renewable Sustainable Energy Rev 2011.
[119] Henze GP, et al. Experimental analysis of model-based predictive optimal control for active and passive building thermal storage inventory. HVAC&R Res 2005;11(2):189–213.
[120] Vetterli J, Benz M. Cost-optimal design of an ice-storage cooling system using mixed-integer linear programming techniques under various electricity tariff schemes. Energy Build 2012;49(0):226–34.
[121] Braun JE. A near-optimal control strategy for cool storage systems with dynamic electric rates (RP-1252). HVAC&R Res 2007;13(4):557–80.
[122] Corcoran BA, Jenkins N, Jacobson MZ. Effects of aggregating electric load in the United States. Energy Policy 2012.
[123] Reddy TA, Lukes JK, Norford LK. Benefits of multi-building electric load aggregation: actual and simulation case studies. ASHRAE Trans 2004;110:2.
[124] Reddy TA, Norford L. Proposed tools and capabilities for proactive multi-building load management: Part 1—Customer aggregation. ASHRAE Trans 2004;110:2.
[125] Norford L, Reddy TA. Proposed tools and capabilities for proactive multi-building load management: Part 2—Aggregated operation. ASHRAE Trans 2004;110:2.
[126] Perfumo C, et al. Load management: model-based control of aggregate power for populations of thermostatically controlled loads. Energy Convers Manage 2012;55:36–48.
[127] Hu M, Weir JD, Wu T. Decentralized operation strategies for an integrated building energy system using a memetic algorithm. Eur J Oper Res 2012;217(1):185–97.
[128] Anandalaskhmi, TK, Sathiakumar, S, Parameswaran, N. Peak reduction algorithms for a smart community. In: Energy efficient technologies for sustainability (ICEETS), 2013 international conference on. 2013.
[129] Caridi M, Cavalieri S. Multi-agent systems in production planning and control: an overview. Prod Plann Control 2004;15(2):106–18.
[130] Biabani, M, Golkar, MA, Sajadi, A. Operation of a multi-agent system for load management in smart power distribution system. In: Environment and electrical engineering (EEEIC), 2012 11th International conference on. IEEE; 2012.
[131] Yousefi S, Moghaddam MP, Majd VJ. Optimal real time pricing in an agent-based retail market using a comprehensive demand response model. Energy 2011;36(9):5716–27.
[132] Yang R, Wang L. Development of multi-agent system for building energy and comfort management based on occupant behaviors. Energy Build 2013;56(0):1–7.
[133] Zhang T, Siebers PO, Aickelin U. Modelling electricity consumption in office buildings: an agent based approach. Energy Build 2011;43(10):2882–92.
[134] Wang Z, et al. Multi-agent control system with information fusion based comfort model for smart buildings. Appl Energy 2012;99(0):247–54.
[135] Mo, Z, Mahdavi., A. An agent-based simulation-assisted approach to bi-lateral building systems control. In: Proc. eighth Int. IBPSA Conf. 2003.
[136] Dounis, A, Caraiscos., C. Intelligent technologies for energy efficiency and comfort in a building environment. In: International conference of technology and automation. 2005.
[137] Jia W, Kang C, Chen Q. Analysis on demand-side interactive response capability for power system dispatch in a smart grid framework. Electric Power Systems Research 2012;90:11–7.
[138] Valenzuela J, Thimmapuram PR, Kim J. Modeling and simulation of consumer response to dynamic pricing with enabled technologies. Appl Energy 2012;96(0):122–32.
[139] Jiang, Z. Agent-based control framework for distributed energy resources microgrids. In: Intelligent agent technology, 2006. IAT'06. IEEE/WIC/ACM International conference on. IEEE; 2006.
[140] Lennart L. System identification: theory for the user. Upper Saddle River, NJ: PTR Prentice Hall; 1999.
[141] Privara, S., et al. Modeling and identification of a large multi-zone office building. In: Control applications (CCA), 2011 IEEE international conference on. IEEE; 2011.
[142] Privara, S., et al. Predictive control oriented subspace identification based on building energy simulation tools. In: Control & automation (MED), 2012 20th Mediterranean conference on. IEEE; 2012.
[143] Jiménez MJ, Madsen H. Models for describing the thermal characteristics of building components. Build Environ 2008;43(2):152–62.
[144] Zacekova, E, Privara, S, Vana, Z. Model predictive control relevant identification using partial least squares for building modeling. In: Australian control conference (AUCC), 2011. IEEE; 2011.
[145] Braun, M., et al. Multi-level pseudo-random signal design and "model-on-demand" estimation applied to nonlinear identification of a RTP wafer reactor. In: American control conference, 1999. Proceedings of the 1999. IEEE;1999.

[146] Braun M, Ortiz-Mojica R, Rivera D. Application of minimum crest factor multisinusoidal signals for "plant-friendly" identification of nonlinear process systems. Control Eng Pract 2002;10(3):301–13.
[147] Rivera DE, et al. Constrained multisine input signals for plant-friendly identification of chemical process systems. J Process Control 2009;19 (4):623–35.
[148] Agbi, C, Song, Z, Krogh, B. Parameter identifiability for multi-zone building models. In Decision and control (CDC), 2012 IEEE 51st annual conference on. IEEE; 2012.
[149] FSECPVDG Division, grid-connected photovoltaic system design review and approval: Operations and procedures. Apr. 23, 2003; Florida Solar Energy Center.